HP 59306A

OPERATING AND SERVICE MANUAL

59306A
Relay Actuator

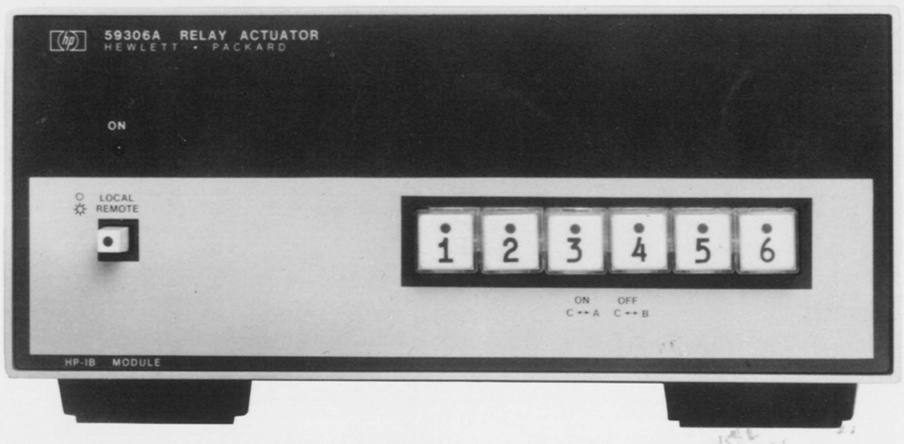

HEWLETT PACKARD

HP 59306A

CERTIFICATION

Hewlett-Packard Company certifies that this product met its published specifications at the time of shipment from the factory. Hewlett-Packard further certifies that its calibration measurements are traceable to the United States National Bureau of Standards, to the extent allowed by the Bureau's calibration facility, and to the calibration facilities of other International Standards Organization members.

WARRANTY

This Hewlett-Packard instrument product is warranted against defects in material and workmanship for a period of one year from date of shipment. During the warranty period, Hewlett-Packard Company will, at its option, either repair or replace products which prove to be defective.

For warranty service or repair, this product must be returned to a service facility designated by HP. Buyer shall prepay shipping charges to HP and HP shall pay shipping charges to return the product to Buyer. However, Buyer shall pay all shipping charges, duties, and taxes for products returned to HP from another country.

HP warrants that its software and firmware designated by HP for use with an instrument will execute its programming instructions when properly installed on that instrument. HP does not warrant that the operation of the instrument, or software, or firmware will be uninterrupted or error free.

LIMITATION OF WARRANTY

The foregoing warranty shall not apply to defects resulting from improper or inadequate maintenance by Buyer, Buyer-supplied software or interfacing, unauthorized modification or misuse, operation outside of the environmental specifications for the product, or improper site preparation or maintenance.

NO OTHER WARRANTY IS EXPRESSED OR IMPLIED. HP SPECIFICALLY DISCLAIMS THE IMPLIED WARRANTIES OF MERCHANTABILITY AND FITNESS FOR A PARTICULAR PURPOSE.

EXCLUSIVE REMEDIES

THE REMEDIES PROVIDED HEREIN ARE BUYER'S SOLE AND EXCLUSIVE REMEDIES. HP SHALL NOT BE LIABLE FOR ANY DIRECT, INDIRECT, SPECIAL, INCIDENTAL, OR CONSEQUENTIAL DAMAGES, WHETHER BASED ON CONTRACT, TORT, OR ANY OTHER LEGAL THEORY.

ASSISTANCE

Product maintenance agreements and other customer assistance agreements are available for Hewlett-Packard products.

For any assistance, contact your nearest Hewlett-Packard Sales and Service Office. Addresses are provided at the back of this manual.

4/81 PG1-8WOC 10/79

OPERATING AND SERVICE MANUAL

HP 59306A
RELAY ACTUATOR

SERIAL PREFIX: 3002A

This manual applies directly to Hewlett-Packard Model 59306A with the above Serial Prefix 3002A. For instruments with Serial Prefix above 3002A, a manual change sheet is supplied. For instruments with Serial Prefixes below 3002A, refer to Section VII.

© Copyright HEWLETT-PACKARD 1986
5301 STEVENS CREEK BOULEVARD, SANTA CLARA, CA 95051-7299

MANUAL PART NUMBER 59306-90007

OCTOBER 1991

HEWLETT PACKARD

SAFETY CONSIDERATIONS

GENERAL

This product and related documentation must be reviewed for familiarization with safety markings and instructions before operation.

This product is a Safety Class I instrument (provided with a protective earth terminal).

BEFORE APPLYING POWER

Verify that the product is set to match the available line voltage and the correct fuse is installed. Refer to Section II, Installation.

SAFETY EARTH GROUND

An uninterruptible safety earth ground must be provided from the mains power source to the product input wiring terminals or supplied power cable.

SAFETY SYMBOLS

⚠ Instruction manual symbol; the product will be marked with this symbol when it is necessary for the user to refer to the instruction manual.

ϟ Indicates hazardous voltages.

⏚ OR ⊥ Indicates terminal is connected to chassis when such connection is not apparent.

∼ Alternating current.

⎓ Direct current.

WARNING The **WARNING** sign denotes a hazard. It calls attention to a procedure, practice, or the like, which, if not correctly performed or adhered to, could result in personal injury. Do not proceed beyond a **WARNING** sign until the indicated conditions are fully understood and met.

CAUTION The **CAUTION** sign denotes a hazard. It calls attention to an operating procedure, practice, or the like, which, if not correctly performed or adhered to, could result in damage to or destruction of part or all of the product. Do not proceed beyond a **CAUTION** sign until the indicated conditions are fully understood and met.

SAFETY INFORMATION

WARNING

Any interruption of the protective grounding conductor (inside or outside the instrument) or disconnecting the protective earth terminal will cause a potential shock hazard that could result in personal injury. (Grounding one conductor of a two conductor outlet is not sufficient protection.)

Whenever it is likely that the protection has been impaired, the instrument must be made inoperative and be secured against any unintended operation.

If this instrument is to be energized via an autotransformer (for voltage reduction) make sure the common terminal is connected to the earthed pole terminal (neutral) of the power source.

Instructions for adjustments while covers are removed and for servicing are for use by service-trained personnel only. To avoid dangerous electric shock, do not perform such adjustments or servicing unless qualified to do so.

For continued protection against fire, replace the line fuse(s) only with 250V fuse(s) of the same current rating and type (for example, normal blow, time delay). Do not use repaired fuses or short circuited fuseholders.

When measuring power line signals, be extremely careful and always use a step-down isolation transformer whose output voltage is compatible with the input measurement capabilities of this product. This product's front and rear panels are typically at earth ground, so **NEVER TRY TO MEASURE AC POWER LINE SIGNALS WITHOUT AN ISOLATION TRANSFORMER.**

TABLE OF CONTENTS

Section	Title	Page
I	GENERAL INFORMATION	1-1
	1-1. Introduction	1-1
	1-3. Description	1-1
	1-5. Instrument Identification	1-1
	1-7. Equipment Supplied	1-1
	1-9. Specifications	1-1
	1-11. Signal Mnemonics	1-2
II	INSTALLATION	2-1
	2-1. Introduction	2-1
	2-3. Unpacking and Inspection	2-1
	2-5. Storage and Shipment	2-1
	2-8. Power Requirements	2-1
III	OPERATION AND PROGRAMMING	3-1
	3-1. Introduction	3-1
	3-3. Controls, Indicators, and Connectors	3-1
	3-5. Programming	3-3
IV	THEORY OF OPERATION	4-1
	4-1. Introduction	4-1
	4-3. Integrated Circuit Operation	4-1
	4-5. Low-Power BCD to Decimal Decoder	4-1
	4-7. Low-Power TTL 5-Bit Comparator	4-2
	4-9. Functional Block Diagram Theory	4-2
	4-11. Handshake Logic	4-2
	4-13. Bus Logic	4-2
	4-16. Decode Logic	4-4
	4-18. Remote/Local Logic	4-4
	4-20. Local Lockout Logic	4-4
	4-22. Relay Select Logic	4-5
	4-24. Flow Diagrams	4-5
V	MAINTENANCE	5-1
	5-1. Introduction	5-1
	5-3. Test Equipment	5-1
	5-5. In-Cabinet Performance Check	5-1
VI	REPLACEABLE PARTS	6-1
	6-1. Introduction	6-1
	6-4. Ordering Information	6-1
VII	MANUAL CHANGES	7-1
	7-1. Introduction	7-1
	7-3. Manual Changes	7-1
	7-5. Newer Instruments	7-1
	7-7. Older Instruments	7-1
VIII	SERVICE	8-1
	8-1. Introduction	8-1

LIST OF TABLES

Table	Title	Page
1-1.	Equipment Supplied	1-1
1-2.	Specifications	1-2
1-3.	Signal Mnemonics	1-2
3-1.	Programming Codes	3-3
3-2.	Special Action Codes	3-4
3-3.	59306A Programming Example	3-4
3-4.	59306A Relay Actuator	3-5
4-1.	BCD/Decimal Decoder Truth Table	4-1
4-2.	5-Bit Comparator Truth Table	4-2
5-1.	Recommended Test Equipment	5-1
5-2.	In-Cabinet Performance Check	5-1
5-3.	HP-IB Verification Program Using HP 9820A or HP 9830A Calculator	5-3
6-1.	Replaceable Parts, 59306A Relay Actuator	6-3
6-2.	59306A Cabinet Parts	6-7
6-3.	Manufacturers Code List	6-7
7-1.	Manual Backdating	7-1
7-2.	Replaceable Parts	7-5

LIST OF FIGURES

Figure	Title	Page
3-1.	HP 59306A Relay Actuator Front Panel	3-1
3-2.	HP 59306A Relay Actuator Rear Panel	3-2
4-1.	BCD/Decimal Decoder	4-1
4-2.	5-Bit Comparator	4-2
4-3.	HP 59306A Relay Actuator, Functional Block Diagram	4-3
4-4.	Flow Diagram 1, Putting 59306A in REMOTE	4-5
4-5.	Flow Diagram 2, Processing Relay State Codes	4-6
4-6.	Flow Diagram 3, Processing Relay Select Codes	4-7
4-7.	Flow Diagram 4, Programming Local Lockout	4-8
6-1.	HP 59306A Cabinet Parts	6-6
7-1.	HP 59306A A1 Schematic Diagram and Component Locator	7-9
8-1.	Schematic Diagram Notes	8-2
8-2.	Digital Bus Connector Pin Designations	8-3
8-3.	HP 59306A Schematic Diagram	8-7
8-4.	A3 Switch Assembly Schematic Diagram	8-10

SECTION I
GENERAL INFORMATION

1-1.INTRODUCTION

1.-2. This section provides general information on the HP 59306A Relay Actuator including instrument description, equipment supplied, instrument specifications, and signal mnemonics.

1-3. DESCRIPTION

1-4. The HP 59306A Relay Actuator contains six relays. The state of each relay can be controlled locally by front-panel pushbutton switches or remotely by programming information on the HP Interface Bus. Using either method, the relays may be used to control external devices such as electrically controlled attenuators, switches, or other devices. The front-panel pushbuttons illuminate or extinguish to indicate the state of each relay.

1-5. INSTRUMENT IDENTIFICATION

1-6. Each Hewlett-Packard instrument has a 10-character serial number (e.g., 0000A00000). The four-digit serial prefix identifies a group of identical instruments, and the five-digit suffix is a serial number unique to each instrument. If the seiral prefix of your instrument differs from that listed on the title page of this manual, your instrument is different from this manual. A manual change sheet is included with this manual to describe the differences. If the manual change sheet is missing, request one from the nearest Hewlett-Packard Sales and Service Office listed at the back of this manual.

1-7. EQUIPMENT SUPPLIED

1-8. *Table 1-1* lists the equipment supplied with the HP 59306A.

Table 1-1. Equipment Supplied

DESCRIPTION	HP PART NUMBER
Detachable Power Cord, 231 cm (7½ ft. long)	8120-1378

1-8a. OPTIONS

1-8a. Option W30 (Extended Hardware Support) provides two additional years of return-to-HP hardware-service support. Option W30 is available only at time of purchase. Service contracts are available from Hewlett-Packard for instruments which did not include Option W30 at time of purchase. For more information, contact your nearest Hewlett-Packard Sales and Support office (offices are listed at the back of this manual).

1-9. SPECIFICATIONS

1-10. Specifications for the HP 59306A are given in *Table 1-2.*

Table 1-2. Specifications

ELECTRICAL:
Load on bus: 3.3 mA per line
Relay settling time: 50 ms
Relay contacts: 0.5 amp at 28V dc or 115V ac
Power requirements: 115V or 230V ±10%, 48 to 440 Hz, 25 VA max

ENVIRONMENTAL: Operating temperature 0 to 50°C.

DIMENSIONS:
Height: 4 inches (101.6 mm) including cabinet feet
Width: 8.38 inches (212.9 mm)
Depth: 11.6 inches (294.6 mm)

WEIGHT:
Net Weight: 5 lbs., 13 oz. (2.64 kg)
Shipping Weight: 7 lbs. 2 oz. (3.23 kg)

1-11. SIGNAL MNEMONICS

1-12. *Table 1-3. is a list of signal mnemonics for the HP 59306A.*

Table 1-3. Signal Mnemonics

MNEMONIC	NAME
ADDR	Address
AORB	A or B
CLK	Clock
$\overline{\text{CLK}}$	"Not" Clock
$\overline{\text{CLR}}$	"Not" Clear
DAC	Data Accepted
DAV	Data Valid
DIO	Data Input/Output
ENABLE	Enable
EOP	End Output
HSENABLE	Handshake Enable
HSOUT	Handshake Out
LLO	Local Lockout
$\overline{\text{LLO}}$	"Not" Local Lockout
MRE	Multiple Response Enable
$\overline{\text{MRE}}$	"Not" Multiple Response Enable
REMOTE	Remote
REN	Remote Enable
RFD	Ready for Data

SECTION II
INSTALLATION

2-1. INTRODUCTION

2-2. This section contains information for unpacking, inspection, repacking, storage, and installation.

2-3. UNPACKING AND INSPECTION

2-4. If the shipping carton is damaged, ask that the carrier's agent be present when the instrument is unpacked. Inspect the instrument for damage. If the instrument is damaged or fails to meet electrical specifications, notify the carrier and the nearest Hewlett-Packard Sales and Service office immediately (offices are listed at the back of this manual). Retain the shipping carton and padding material for the carrier's inspection. The Sales and Service office will arrange for the repair or replacement of your instrument without waiting for the claim against the carrier to be settled.

2-5. STORAGE AND SHIPMENT

2-6. To protect the HP 59306A during storage or shipment, good commercial packing methods should be used. Reliable commercial packing and shipping companies have the facilities and materials to adequately repack an instrument.

NOTE

Before returning an instrument to Hewlett-Packard, contact the nearest Hewlett-Packard Sales and Service Office for instructions.

2-7. Conditions during storage and shipment should normally be limited as follows:

a. Maximum altitude: 25,000 feet.
b. Minimum temperature: −40°F (−40°C)
c. Maximum temperature: +167°F (+75°C).

2-8. POWER REQUIREMENTS

2-9. The HP 59306A operates from either 115 or 230 volts, 48 Hz to 440 Hz. Before applying power, the screwdriver-operated switch mounted inside the instrument must be set to the correct position (115 or 230) and the correct fuse (as labeled on the rear panel) must be installed.

SECTION III
OPERATION AND PROGRAMMING

3-1. INTRODUCTION

3-2. This section contains operating information including a description of controls and indicators, programming and programming examples.

3-3. CONTROLS, INDICATORS, AND CONNECTORS

3-4. *Figure 3-1* identifies and describes the front panel controls and indicators. *Figure 3-2* shows the rear panel connectors and controls.

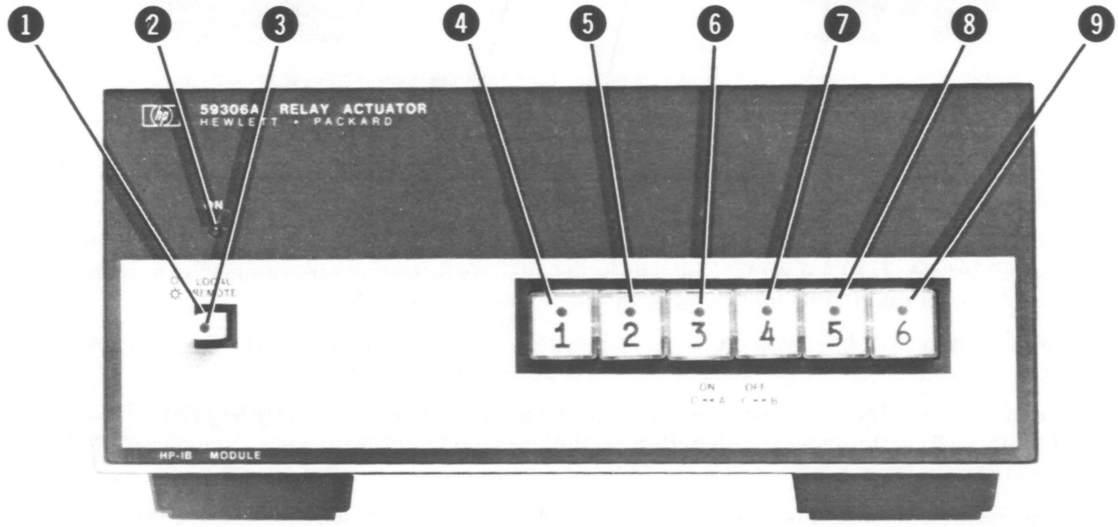

1. LOCAL RESET switch: When pushed resets the HP 59306A to front panel controls provided the local lockout command has not been sent to the HP 59306A (see paragraph 4-19).
2. ON indicator: When illuminated, indicates instrument has primary power applied.
3. REMOTE Indicator: When illuminated, indicates the HP 59306A is not in local operation and has been addressed at some time; instrument is not necessarily under the control of remote programming when this indicator is illuminated (see the note that follows paragraph 4-19).
4. [1] Switch-indicator: Control for terminals A-1, B-1, and C-1 (located on rear panel). When illuminated, indicates in/out terminals C-1 and A-1 are connected together. When off, in/out terminals C-1 and B-1 are connected together.
5. [2] Switch-indicator: Control for terminals A-2, B-2, and C-2. When illuminated, in/out terminals C-2 and A-2 are connected together. When off, in/out terminals C-2 and B-2 are connected together.
6. [3] Switch-indicator: Control for terminals A-3, B-3, and C-3. When illuminated, in/out terminals C-3 and A-3 are connected together. When off, in/out terminals C-3 and B-3 are connected together.
7. [4] Switch-indicator: Controls for terminals A-4, B-4, and C-4. When illuminated, in/out terminals C-4 and A-4 are connected together. When off, in/out terminals C-4 and B-4 are connected together.
8. [5] Switch-indicator: Control for terminals A-5, B-5, and C-5. When illuminated, in/out terminals C-5 and A-5 are connected together. When off, in/out terminals C-5 and B-5 are connected together.
9. [6] Switch-indicator: Control for terminals A-6, B-6, and C-6. When illuminated, in/out terminals C-6 and A6 are connected together. When off, in/out terminals C-6 and B-6 are connected together.

Figure 3-1. HP 59306A Relay Actuator Front Panel

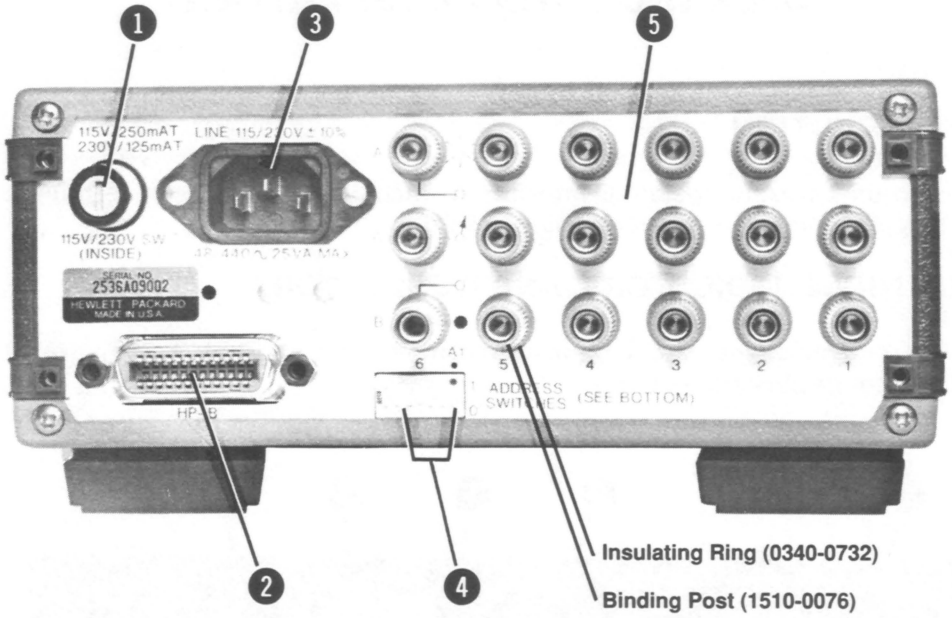

1. FUSE: Requires a 250 mAT normal blow fuse for 115-volt operation; 125 mAT for 230-volt operation.
2. DIGITAL BUS 1.0 LOAD connector: 24-pin connector used to convey data and programming instructions to the HP 59306A. The "1.0 LOAD" label indicates that the instrument represents the normal allowable standard load for one instrument on the Interface Bus (see *Table 1-2*).
3. AC Input Connector: AC power receptacle. IEC type with offset pin connected to the chassis. Accepts 115 volts or 230 volts ±10%, 48 to 440 Hz. Maximum power draw is 6-volt amperes.
4. Address Switches: These switches are used to assign an address code to the HP 59306A. Allowable codes and their ASCII equivalents are identified on the decal on the bottom panel. Switches 6 and 7 are not connected (see *Table 3-2*).
5. In/Out Terminals: Banana jacks arranged in rows A, B, and C (common) and numbered to correspond with front panel switches 1 through 6. Front-panel switch positions or remote programming determines the connection of in/out terminals A or B to in/out terminal C.

Figure 3-2. HP 59306A Relay Actuator Rear Panel

3-5. PROGRAMMING

3-6. The HP 59306A operates in response to a specific set of programming codes. These codes, shown in *Table 3-1*, determine whether in/out terminal B is connected to in/out terminal C (terminals located on the rear panel). The HP 59306A also responds to a set of special action codes. These codes, shown in *Table 3-2*, determine the operating state (i.e., local or remote). A sample program depicting the use of both sets of codes is shown in *Table 3-3*.

NOTE

The HP 59306A automatically unaddresses itself (clears its Listen FF) whenever MRE is low and the code present on the DIO lines is not its own address-to-listen code.

3-7. When the HP 59306A is switch to remote operation (as listed in Sequence 2, *Table 3-3*) all the relays stay in the state they were in under LOCAL. If other states are desired, they must be programmed. When switched to LOCAL from REMOTE, (as listed in Sequence 10, *Table 3-3*) all relays assume states indicated by the position of the front panel switches.

Table 3-1. Programming Codes

DIO LINES							ASCII	HP 59306A RESPONSE
7	6	5	4	3	2	1		
1	0	0	0	0	0	1	A	Relay state code. Programs instrument to connect any of the A in/out terminals to the appropriate C in/out terminal. Specific terminal connection depends on the succeeding code in program sequence.
1	0	0	0	0	1	0	B	Relay state code. Programs instrument to connect and of the B in/out terminals to the appropriate C in/out terminal. Specific terminal connection depends on the succeeding code in program sequence.
0	1	1	0	0	0	1	1	Relay select code. These codes select which A or B terminal is to be connected to the appropriate C in/out terminal. For example, if an ASCII A code is succeeded by an ASCII 2, terminals A-2 and C-2 are connected together.
0	1	1	0	0	1	0	2	
0	1	1	0	0	1	1	3	
0	1	1	0	1	0	0	4	
0	1	1	0	1	0	1	5	
0	1	1	0	1	1	0	6	

Table 3-2. Special Action Codes

NAME	MRE	REN	DIO LINES 7	6	5	4	3	2	1	ASCII EQUIV.	HP 59306A RESPONSE
*Unlisten	L	H	0	1	1	1	1	1	1	?	Clears instrument as a listener.
Address Code	L	L	0	1	A_5†	A_4†	A_3†	A_2†	A_1†		Addresses instrument as a listener and enables it to respond to data on DIO lines.
††Local Lockout	L	L	0	0	1	0	0	0	1	DC1	Disables LOCAL RESET switch on front panel. Unit responds to remote programming only.

*The HP 59306A automatically unaddresses itself (clears its Listen FF) whenever MRE is low and the code present on the DIO lines is not its own address-to-listen code.

†$A_5 \rightarrow A_1$ must coincide with the code set on the HP 59306A address switches.

††Local lockout is used primarily as a troubleshooting aid and can be overridden by setting REN high.

Table 3-3. HP 59306A Programming Example

SEQUENCE	CONTROL LINES EOP	REN	MRE	DIO LINES ASCII CODE	DESCRIPTION OF PROGRAM SEQUENCE
1	H	H	L	?	Clears all listeners
2	H	L	L	% (see note)	HP 59306A addressed to listen. REN = L sets HP 59306A in remote. Front panel REMOTE indicator illuminates.
3	H	L	L	DC1	Local lockout command disables LOCAL RESET switch. HP 59306A only responds to remote programming (see *Table 3-2*).
4	H	L	H	A	Programs HP 59306A to connect in/out terminal A to in/out terminal C when instructed to do so.
5	H	L	H	3	In/out terminal A-3 connects to in/out terminal C-3. Number 3 front panel switch/indicator illuminates.
6	H	L	H	5	In/out terminal A-5 connects to in/out terminal C-5. Number 5 front panel switch/indicator illumintes.
7	H	L	H	B	Program HP 59306A to connect in/out terminal B to in/out terminal C when instructed to do so.
8	H	L	H	3	In/out terminal B-3 connects to in/out terminal C-3. Number 3 front panel switch/indicator extinguishes.
9	H	L	H	5	In/out terminal B-5 connects to in/out terminal C-5. Number 5 front panel switch/indicator extinguishes.
10	H	H	H		REN = H; HP 59306A resets to local control (front panel switch/indicators control outputs). REMOTE light extinguishes.

NOTE: Bits 1 through 5 must correspond with switch settings of address switch on rear panel.

Table 3-4. 59306A Relay Actuator

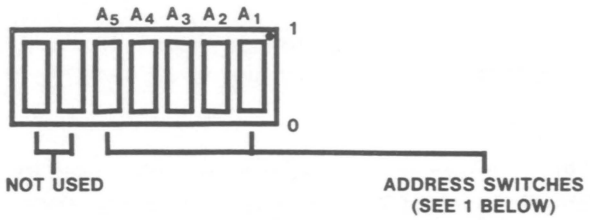

SWITCH OPERATION

TO SET A SWITCH TO 1 STATE PRESS IN, OR SLIDE SWITCH, HERE
TO SET A SWITCH TO Ø STATE PRESS IN, OR SLIDE SWITCH, HERE

SET-UP INSTRUCTIONS

1) SET ADDRESS SWITCHES TO ONE OF THE SETTINGS GIVEN IN TABLE 1.

ADDRESS SWITCH SETTINGS
(TABLE 1)

A_5	A_4	A_3	A_2	A_1	7-LINE ASCII CODE	7-LINE OCTAL EQUIV.	A_5	A_4	A_3	A_2	A_1	7-LINE ASCII CODE	7-LINE OCTAL EQUIV.
0	0	0	0	0	SP	040	1	0	0	0	0	0	060
0	0	0	0	1	!	041	1	0	0	0	1	1	061
0	0	0	1	0	”	042	1	0	0	1	0	2	062
0	0	0	1	1	#	043	1	0	0	1	1	3	063
0	0	1	0	0	$	044	1	0	1	0	0	4	064
0	0	1	0	1	%	045	1	0	1	0	1	5	065
0	0	1	1	0	&	046	1	0	1	1	0	6	066
0	0	1	1	1	’	047	1	0	1	1	1	7	067
0	1	0	0	0	(	050	1	1	0	0	0	8	070
0	1	0	0	1	)	051	1	1	0	0	1	9	071
0	1	0	1	0	*	052	1	1	0	1	0	:	072
0	1	0	1	1	+	053	1	1	0	1	1	;	073
0	1	1	0	0	,	054	1	1	1	0	0	<	074
0	1	1	0	1	–	055	1	1	1	0	1	=	075
0	1	1	1	0	.	056	1	1	1	1	0	>	076
0	1	1	1	1	/	057							

OPERATING INSTRUCTIONS

PROGRAMMING:

A. SEND REMOTE ENABLE COMMAND (SET REN LOW).
B. SEND LISTEN ADDRESS OF STEP 1.
C. SEND ONE RELAY STATE CODE FROM TABLE 2.

RELAY STATE CODES
(TABLE 2)

FUNCTION	ASCII CODE	OCTAL EQUIV.
CONNECT TERMINAL A TO TERMINAL C	A	101
CONNECT TERMINAL B TO TERMINAL C	B	102

D. SEND ONE OR MORE CODES FROM TABLE 3 TO SWITCH THE DESIGNATED RELAYS TO THE STATE OF STEP C.

RELAY SELECT CODES
(TABLE 3)

RELAY	ASCII CODE	OCTAL EQUIV.
1	1	061
2	2	062
3	3	063
4	4	064
5	5	065
6	6	066

PROGRAMMING SUMMARY SHEET

Possible Listen Addresses: Any ASCII code of the form $01A_5A_4A_3A_2A_1$ where $A_5 \rightarrow A_1$ can be any combination of 1's and 0's other than 11111. $A_5 \rightarrow A_1$ are set by address switches on the back panel of the HP 59306A 0=DOT IN, 1=DOT OUT on address switches.

NOTE: The HP 59306A automatically unaddresses itself (clears its Listen FF) whenever MRE is low and the code present on the DIO lines is not its own address-to-listen code. When the HP 59306A is switched to remote operation (as listed in Sequence 2 of programming example below) all the relays stay in the state they were in under LOCAL. If other states are desired, they must be programmed. When switched to LOCAL from REMOTE, (as listed in Sequence 10 of the programming example below) all relays assume states indicated by the position of the front panel switches.

SPECIFICATIONS: Electrical: 1.0 Bus Loads; Relay settling time, 50 ms; Relay contacts, 0.5 amp at 28V dc or 115V ac; Power requirements, 115V or 230V ±10%, 48 to 440 Hz, 25 VA max.

SPECIAL ACTION CODES

NAME	MRE	REN	DIO LINES 7	6	5	4	3	2	1	ASCII EQUIV.	HP 59301A RESPONSE
*Unlisten	L	H	0	1	1	1	1	1	1	?	Clears instrument as a listener.
Address Code	L	L	0	1	A_5†	A_4†	A_3†	A_2†	A_1†		Addresses instrument as a listener and enables it to respond to data on DIO lines.
††Local Lockout	L	L	0	0	1	0	0	0	1	DC1	Disables LOCAL RESET switch on front panel. Unit responds to remote programming only.

*The HP 59306A automatically unaddresses itself (clears its Listen FF) whenever MRE is low and the code present on the DIO lines is not its own address-to-listen code.

†$A_5 \rightarrow A_1$ must coincide with the code set on the HP 59306A address switches.

††Local lockout is used primarily as a troubleshooting aid and can be overridden by setting REN high.

PROGRAMMING CODES

DIO LINES 7	6	5	4	3	2	1	ASCII EQUIV.	HP 59306A RESPONSE
1	0	0	0	0	0	1	A	Relay state code. Programs instrument to connect any of the A in/out terminals to the appropriate C in/out terminal. Specific terminal connection depends on the succeeding code in program sequence.
1	0	0	0	0	1	0	B	Relay state code. Programs instrument to connect any of the B in/out terminals to the appropriate C in/out terminal. Specific terminals connection depends on the succeeding code in program sequence.
0	1	1	0	0	0	1	1	Relay select code. These codes select which A or B terminal is to be connected to the appropriate C in/out terminal. For exmaple, if an ASCII A code is code is succeeded by an ASCII 2, terminala A-2 and C-2 are connected together.
0	1	1	0	0	1	0	2	
0	1	1	0	0	1	1	3	
0	1	1	0	1	0	0	4	
0	1	1	0	1	1	0	5	
0	1	1	0	1	1	0	6	

HP 59306A PROGRAMMING EXAMPLE

SEQUENCE	CONTROL LINES EOP	REN	MRE	DIO Lines ASCII CODE	DESCRIPTION OF PROGRAM SEQUENCE
1	H	H	L	?	Clears all listeners
2	H	L	L	% (see note)	HP 59306A addressed to listen. REN = L sets HP 59306A in remote. Front panel REMOTE indicator illuminates.
3	H	L	L	DC1	Local lockout command disables LOCAL RESET switch. HP 59306A only responds to remote programming (see *Table 3-2*).
4	H	L	H	A	Programs HP 59306A to connect in/out terminal A to in/out terminal C when instructed to do so.
5	H	L	H	3	In/out terminal A-3 connects to in/out terminal C-3. Number 3 front panel switch/indicator illuminates.
6	H	L	H	5	In/out terminal A-5 connects to in/out terminal C-5. Number 5 front panel switch/indicator illumintes.
7	H	L	H	B	Program HP 59306A to connect in/out terminal B to in/out terminal C when instructed to do so.
8	H	L	H	3	In/out terminal B-3 connects to in/out terminal C-3. Number 3 front panel switch/indicator extinguishes.
9	H	L	H	5	In/out terminal B-5 connects to in/out terminal C-5. Number 5 front panel switch/indicator extinguishes.
10	H	H	H		REN = H; HP 59306A resets to local control (front panel switch/indicators control outputs). REMOTE light extinguishes.

NOTE: Bits 1 through 5 must correspond with switch settings of address switch on rear panel.

DIGITAL BUS PIN SUMMARY

DIGITAL BUS CONNECTOR PIN NUMBER	LINE NAME	USE
1-4, 13-15	DIO1-7	Carries characters to HP 59306A for relay control or for processing as Bus commands.
16	DIO8	Not monitored or driven, terminated by resistive network.
6 7 8	DAV RFD DAC	These three lines make up the "handshake" system on the HP Interface Bus. DAV is monitored and RFD and DAC are driven by HP 59306A to control rate of data transferred on DIO lines.
9	EOP	Unconditionally clears Listen F/F, halting remote operation. Does not return control to front panel pushbuttons.
11	MRE	Indicates the HP 59306A whether character on DIO lines is Bus command or for relay control.
5	EOI	Not monitored or driven, terminated by resistive network.
10	SRQ	Not monitored or driven, terminated by resistive network.
12	Shield	Not connected.
17	REN	When low the HP 59306A is in remote operation. When high the HP 59306A is in local control.
18-24	Grounds	Connected to chassis ground.

SECTION IV
THEORY OF OPERATION

4-1. INTRODUCTION

4-2. This section explains the operation of integrated circuits and the overall block diagram theory for the Relay Actuator.

4-3. INTEGRATED CIRCUIT OPERATION

4-4. The following paragraphs describe two of the IC's used in the actuator. The remaining IC's that are used are common gates and flip-flops which can be found in standard text books or IC catalogs.

4-5. Low Power BCD to Decimal Decoder

4-6. This IC (*Figure 4-1*) has a typical power dissipation of 70 milliwatts and converts BCD inputs to decimal outputs as shown in *Table 4-1*.

Table 4-1. BCD/Decimal Decoder Truth Table

NO.	BCD INPUT				DECIMAL OUTPUT									
	D	C	B	A	0	1	2	3	4	5	6	7	8	9
0	L	L	L	L	L	H	H	H	H	H	H	H	H	H
1	L	L	L	H	H	L	H	H	H	H	H	H	H	H
2	L	L	H	L	H	H	L	H	H	H	H	H	H	H
3	L	L	H	H	H	H	H	L	H	H	H	H	H	H
4	L	H	L	L	H	H	H	H	L	H	H	H	H	H
5	L	H	L	H	H	H	H	H	H	L	H	H	H	H
6	L	H	H	L	H	H	H	H	H	H	L	H	H	H
7	L	H	H	H	H	H	H	H	H	H	H	L	H	H
8	H	L	L	L	H	H	H	H	H	H	H	H	L	H
9	H	L	L	H	H	H	H	H	H	H	H	H	H	L
I	H	L	H	L	H	H	H	H	H	H	H	H	H	H
N	H	L	H	H	H	H	H	H	H	H	H	H	H	H
V	H	H	L	L	H	H	H	H	H	H	H	H	H	H
A	H	H	L	H	H	H	H	H	H	H	H	H	H	H
L	H	H	H	L	H	H	H	H	H	H	H	H	H	H
I D	H	H	H	H	H	H	H	H	H	H	H	H	H	H

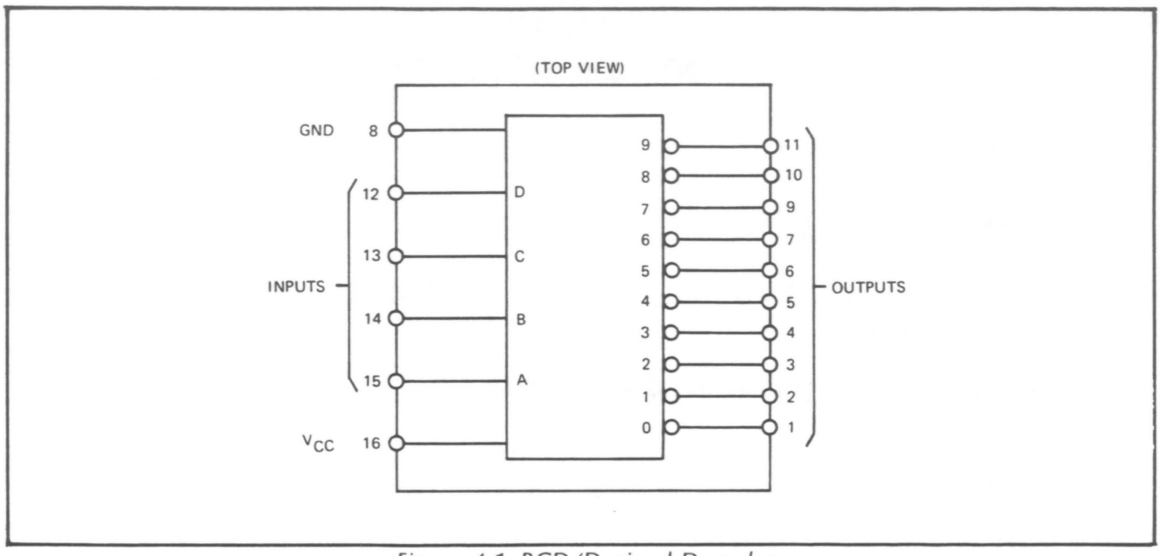

Figure 4-1. BCD/Decimal Decoder

4-7. Low Power TTL 5-Bit Comparator

4-8. This IC (*Figure 4-2*) provides a comparison between two 5-bit words and gives one of three outputs: "Less than", "greater than", or "equal to". A high level on the enable input forces all three outputs low. A low on the enable input allows a comparison to take place. The comparator function is shown in *Table 4-2*. Typical power dissipation is 52 milliwatts.

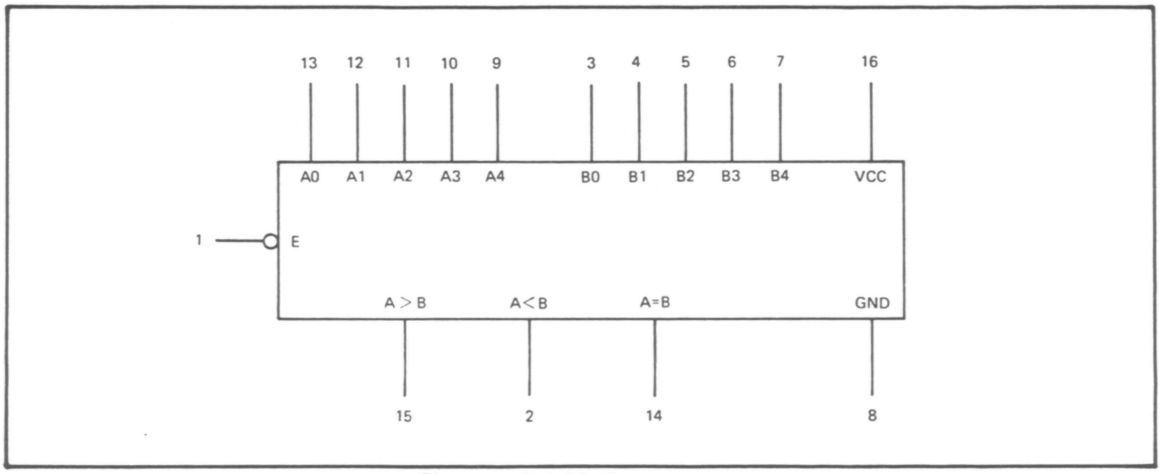

Figure 4-2. 5-Bit Comparator

Table 4-2. 5-Bit Comparator Truth Table

E	A B	A<B	A>B	A=B
H	X X	L	L	L
L	Word A = Word B	L	L	H
L	Word A > Word B	L	H	L
L	Word A < Word B	H	L	L

L = LOW Voltage Level
H = HIGH Voltage Level
X = Either HIGH or LOW Voltage Level

4-9. FUNCTIONAL BLOCK DIAGRAM DESCRIPTION

4-10. *Figure 4-3* illustrates the functional block diagram for the HP 59306A Relay Actuator. The HP 59306A consists of six major circuit groups: Handshake Logic, Bus Logic, Decode Logic, Local Lockout Logic, Remote/Local Logic, and Relay Select Logic. The signal mnemonics used in this section are listed in *Table 1-3*.

4-11. Handshake Logic

4-12. The three wire handshake lines to the Handshake Logic synchronize the operation of the Relay Actuator. The lines are Ready for Data (RFD), Data Valid (DAV), and Data Accepted (DAC). The Handshake Logic processes the DAV signal and produces the Handshake Out (HSOUT) signal for use by the Bus Logic and the Local Lockout Logic. The DAV signal and the Handshake Enable (HSENABLE) signal combine to output the RFD and DAC signals on the bus. The basic purpose of this logic is to signal the other HP 59306A circuits that the DIO lines contain a character for possible processing and to interface the circuits to the HP Interface Bus three-wire handshake system.

4-13. Bus Logic

4-14. The Bus Logic accepts inputs from the Data Input/Output (DIO) lines and the Multiple Response Enable (MRE) signal from the Interface Bus. These inputs, in conjunction with the HSOUT signal enable the Remote/Local Logic and the Local Lockout Logic. In addition, the Bus Logic processes the relay state codes and relay select code present on the DIO lines, combined with the HSOUT and REMOTE signals to output the CLK and $\overline{\text{CLK}}$ signals to the Decode Logic.

4-15. The Bus Logic serves the additonal function, in conjunction with the Remote/Local Logic, to place the HP 59306A into remote operation or take it out of remote operation on command from instructions on the Interface Bus.

4-16. Decode Logic

4-17. The Decode Logic receives the CLK and $\overline{\text{CLK}}$ signals from the Bus Logic and receives relay state codes and relay select codes from the DIO lines. To set a relay select line high, the relay select code corresponding to that line must be present on the DIO lines and the $\overline{\text{CLK}}$ signal must go low. To set the AORB line to a particular state, (which in turn will determine whether the selected relay is in the A or B state) the proper state code must be present on the DIO lines and the CLK signal must go high (see *Table 3-1*). The Decode Logic takes the place of the front panel pushbutton switches to control the Relay Select Logic when the HP 59306A is in remote operation.

4-18. Remote/Local Logic

4-19. The Remote/Local Logic receives the Remote Enable (REN) signal from the Interface Bus along with the ENABLE and ADDR signals from the Bus Logic to produce the REMOTE signal. This action puts the HP 59306A in remote operation. When the REMOTE signal is removed (by closing the LOCAL/RESET switch or setting REN high) the HP 59306A is taken out of remote operation. The LOCAL/RESET switch is disabled and cannot take the HP 59306A out of remote operation when the $\overline{\text{LLO}}$ signal is received from the Local Lockout Logic.

NOTE

When the REMOTE indicator is illuminated the HP 59306A front-panel relay control switches are disabled. Illumination does not indicate whether or note the HP 59306A is under control of the interface bus. This indicator may be illuminated even though the HP 59306A is not under remote control such as after the instrument automatically unaddresses itself (see note that follows paragraph 3-6).

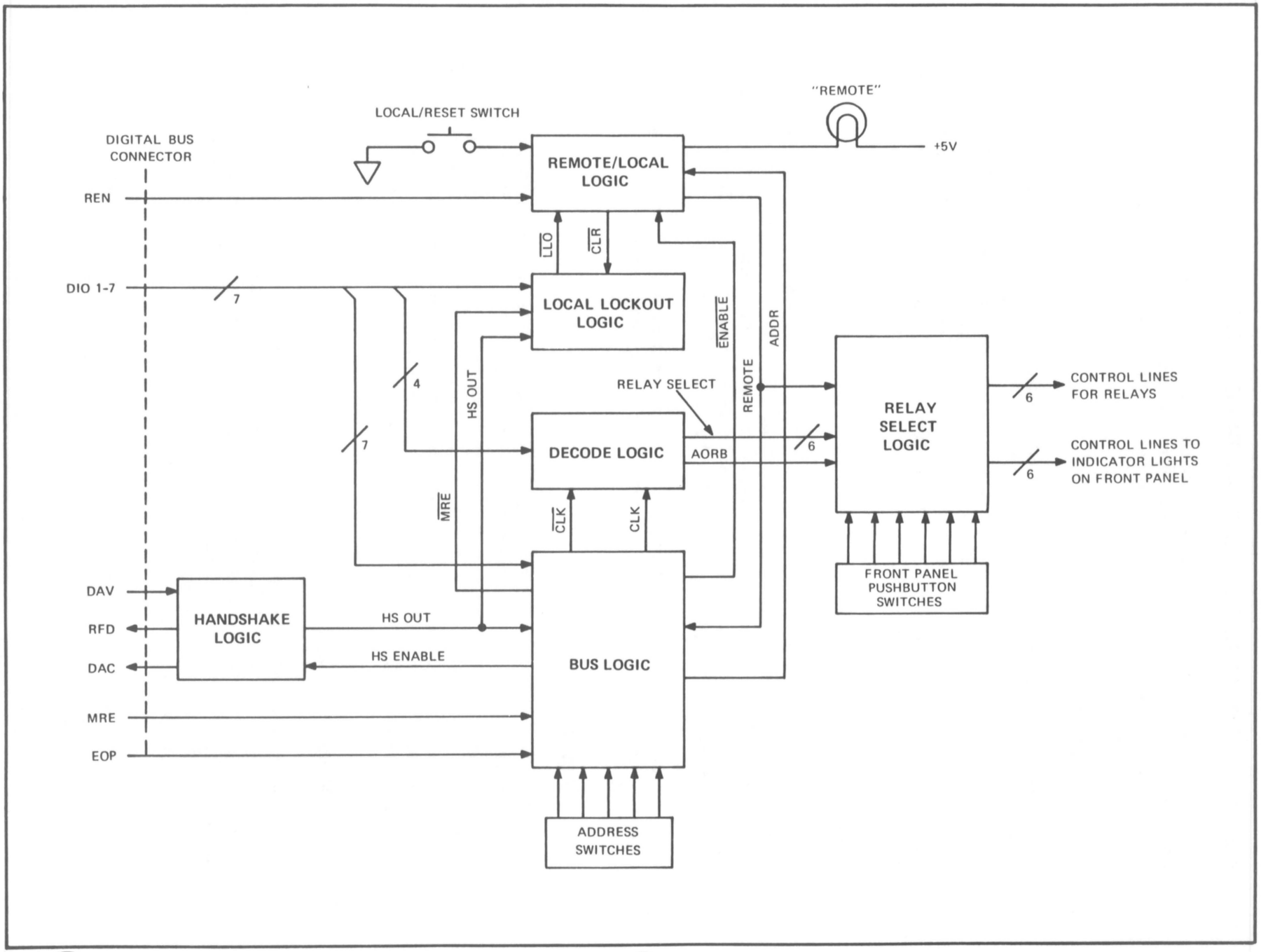

Figure 4-3. HP 59306A Relay Actuator Functional Block Diagram

4-20. Local Lockout Logic

4-21. The Local Lockout Logic locks the HP 59306A in remote operation by disabling the LOCAL/RESET switch with the $\overline{LLO}$ signal. The function of this logic is to hold the HP 59306A in remote until an instruction from the Interface Bus (REN high) returns it to local operation. The logic monitors the DIO lines for the ASCII DC1 character which is processed along the $\overline{MRE}$ and HSOUT signals to produce $\overline{LLO}$. $\overline{LLO}$ is cleared by the $\overline{CLR}$ signal from the Remote/Local Logic. The Local Lockout Logic will lock the HP 59306A in remote operation only when the unit is already in remote. If the HP 59306A is not in remote, this logic will have no effect on the operation or programming.

4-22. Relay Select Logic

4-23. The Relay Select Logic controls the state of the six relays in the HP 59306A. The state of a relay is defined by which in/out terminals are connected together, i.e., state A is in/out terminal A connected to in/out terminal C, and state B is in/out terminal B connected to in/out terminal C. Control is accomplished by signals from the Decoder Logic or by the front panel pushbutton switches. The state of the REMOTE signal determines whether the pushbutton signals or the Decode Logic signals control the Relay Select Logic.

4-24. FLOW DIAGRAMS

4-25. The HP 59306A processes are shown by the flow diagrams, *Figures 4-4* through *4-7*.

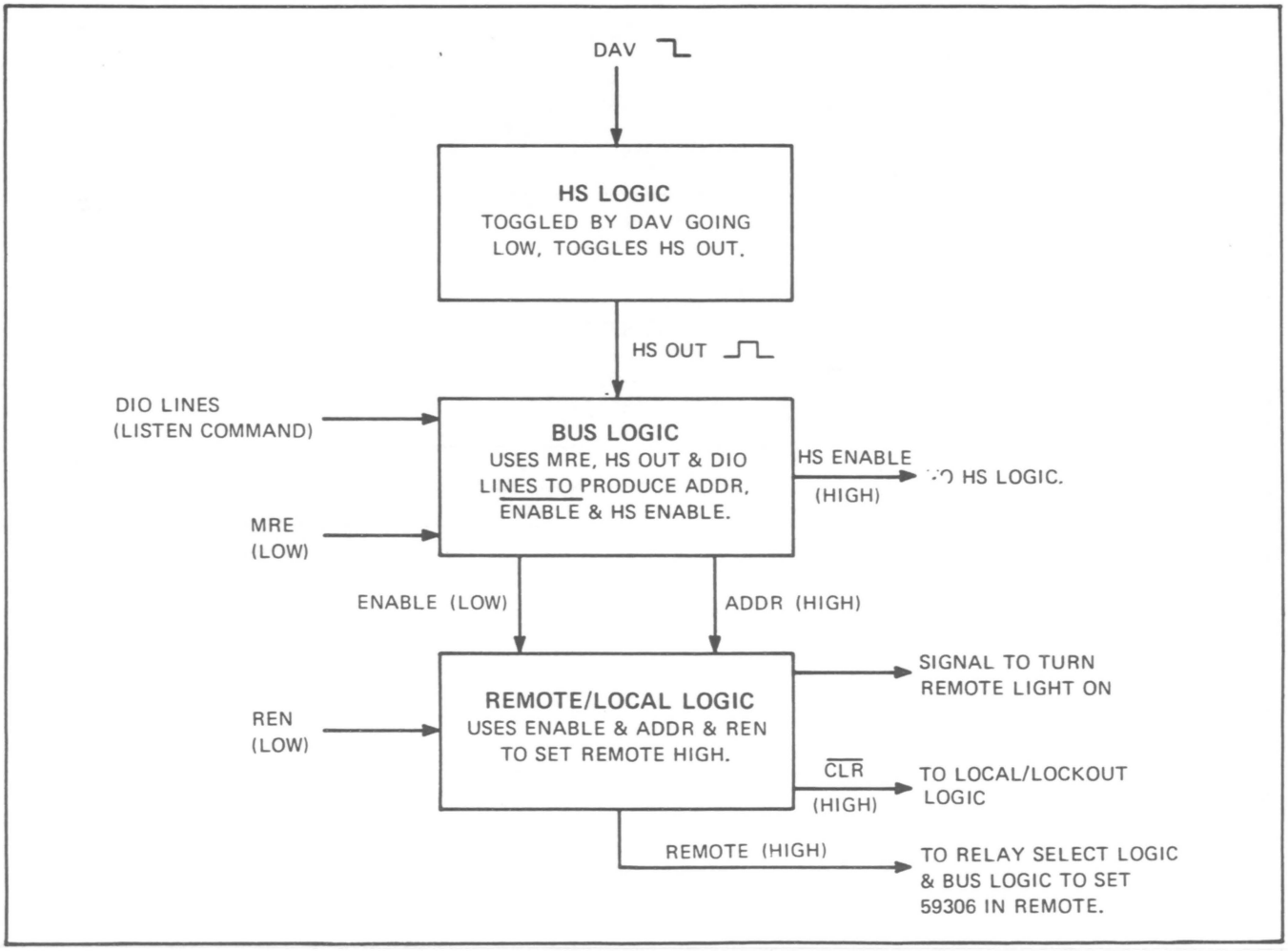

Figure 4-4. Flow Diagram 1, Putting HP 59306A in REMOTE

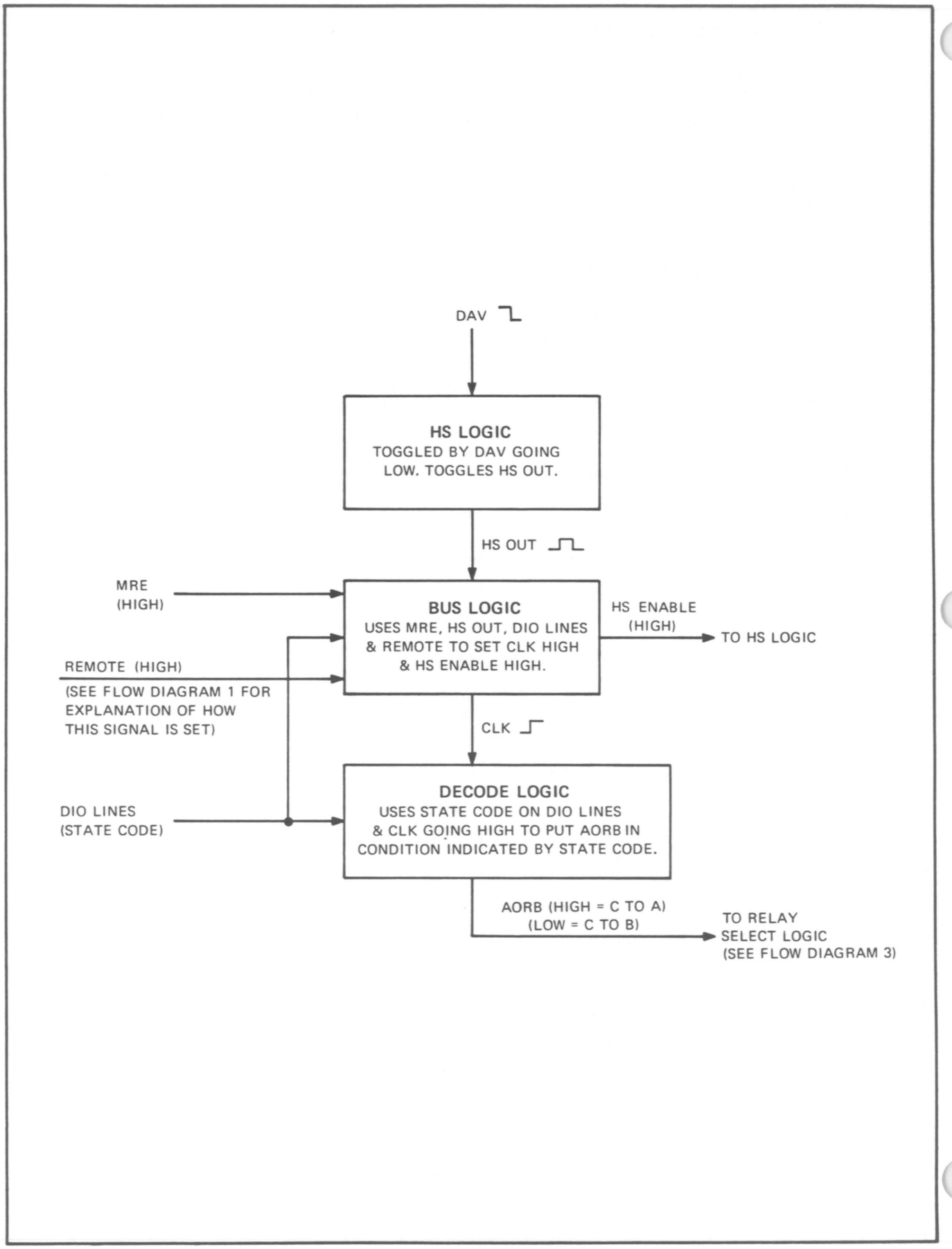

Figure 4-5. Flow Diagram 2, Processing Relay State Codes

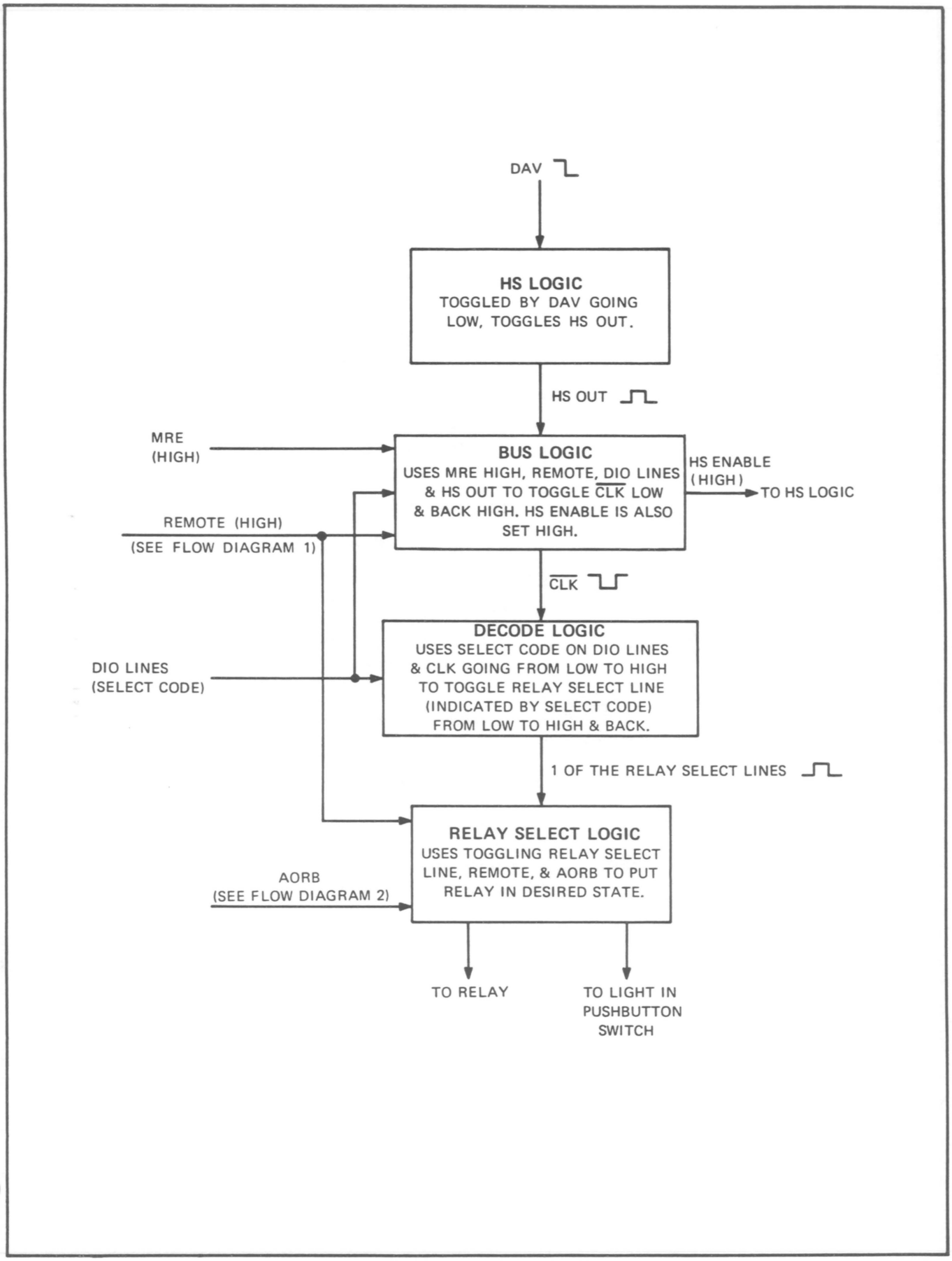

Figure 4-6. Flow Diagram 3, Processing Relay Select Codes

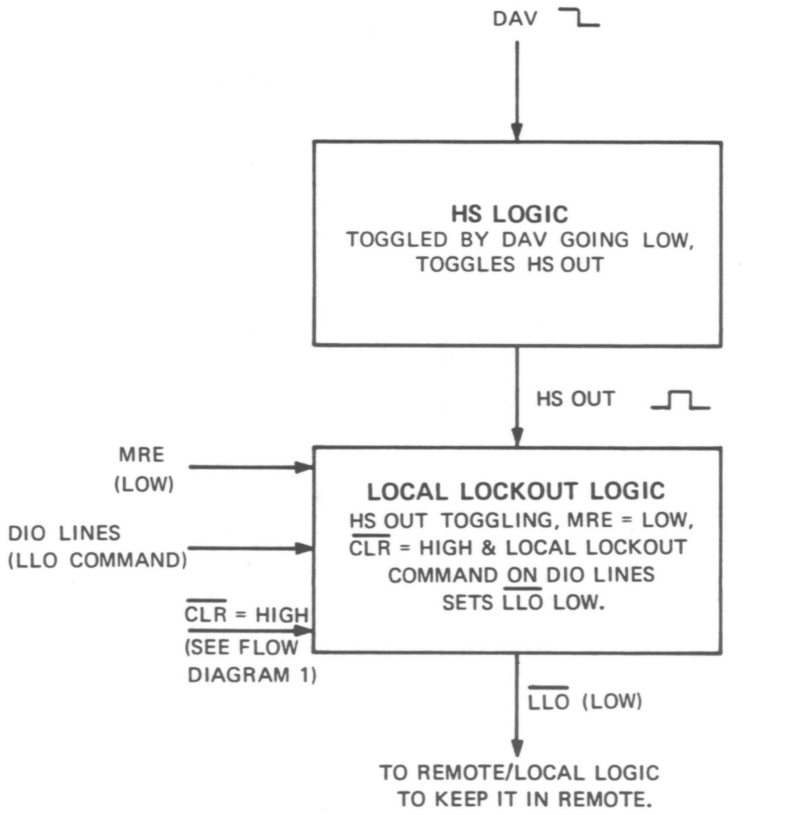

NOTE: LLO MAY BE SET HIGH AND 59306 TAKEN OUT OF REMOTE BY SETTING REN HIGH.

Figure 4-7. Flow Diagram 4, Programming Local Lockout

SECTION V
MAINTENANCE

5-1. INTRODUCTION

5-2. This section contains maintenance and service information including a table of recommended test equipment, in-cabinet performance check, and troubleshooting.

5-3. TEST EQUIPMENT

5-4. *Table 5-1* lists test equipment recommended for maintaining and checking the performance of the HP 59306A. Test equipment having equivalent characteristics may be substituted for the equipment listed.

Table 5-1. Recommended Test Equipment

INSTRUMENT	REQUIRED CHARACTERISTICS	RECOMMENDED
Logic Probe	Test TTL signal levels	HP 10525T
Logic Pulser	Pulse in-circuit IC's	HP 10526T
Digital Voltmeter	0 to +175 volts, Accuracy 0.3%	HP 3435A

5-5. IN-CABINET PERFORMANCE CHECK

5-6. *Table 5-2* contains the in-cabinet performance check. An HP Interface Bus Controller is required to provide signal inputs to the HP 59306A.

5-7. *Table 5-3* contains an HP-IB verification program for use with the HP 9820A and the HP 9830A Calculators. An HP-IB verification test tape may be ordered from Hewlett-Packard for use with the HP 9825A Desktop Computer. The Test Tape Part Number if 59300-10001. Order Service Note 59306A-4 for test program documentation.

Table 5-2. In-Cabinet Performance Check

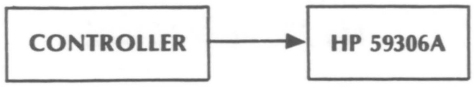

a. Prior to connecting the HP 59306A to a power source, ensure that the voltage selector switch inside the unit is set to correspond with line voltage to be used (115V or 230V). Install correct line fuse and connect HP 59306A to power source. The ON light should illuminate.

b. Connect equipment as illustrated in the above diagram.

c. Set the address switch on the back panel of the HP 59306A to the following code:

A_5	A_4	A_3	A_2	A_1	ASCII Equivalent
0	0	0	0	0	SP

d. Program the Bus controller to set REN low and apply the ASCII code (shown in c) to the Bus data lines. The HP 59306A REMOTE light should illuminate.

e. Program the Bus controller to apply the unlisten code to the bus data lines and set REN high.

A_5	A_4	A_3	A_2	A_1	ASCII Equivalent
1	1	1	1	1	?

The REMOTE light should extinguish.

f. Repeat steps d and e for the following codes:

A_5	A_4	A_3	A_2	A_1	ASCII Equivalent
0	0	0	0	1	!
0	0	0	1	1	#
0	0	1	1	1	'
0	1	1	1	1	/
1	1	1	1	1	>

g. Relay Control, Manual Mode Check:

1. Using the Bus Controller, program the HP 59306A in the manual mode by pulling REN high. Check that REMOTE indicator extinguishes.
2. Pressing front panel switch **a** to the latched (ON) position. Check that switch **a** indicator illuminates.
3. Connect a continuity checker or ohmmeter to rear panel in/out terminals A-1 and C-1 and check for continuity.
4. Disengae switch **a** to OFF position and check for continuity between in/out terminals B-1 and C-1.

   Repeat steps 2 through 4 for swiches **b** through **f**.

h. Relay Control, Remote Mode Check:

1. Using the Bus Controller, set REN low, address the HP 59306A, send state code A followed by relay control codes 1 through 6. Check that all front panel switch indicators illuminate independent of the switch settings. Check that all rear panel terminals have continuity from in/out terminals A to C.
2. Using the Bus Controller, send state code B followed by relay codes 1 through 6. Check that all front panel switch indicators extinguish. Check that all rear panel terminals have continuity from in/out terminals B to C.

Table 5-3. HP-IB Verification Program Using HP 9820A or HP 9830A Calculator

The following program checks the HP 59306A for proper operation of the HP-IB I/O only. To provide a complete functional check of the HP 59306A, this test must be used in combination with the In-Cabinet Performance Test.

a. *Figure 5-1* is the basic flowchart for the verification program:

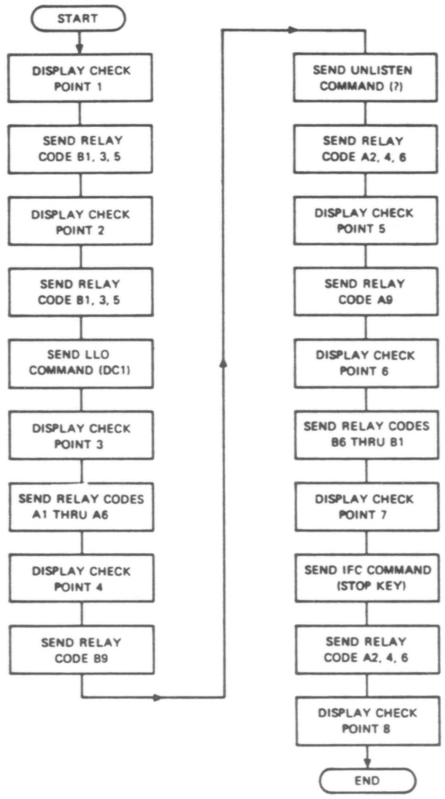

Figure 5-1. Verification Program Flowchart

Table 5-3. HP-IB Verification Program Using HP 9820A or HP 9830A Calculator (Continued)

b. Verification Using HP 9820A Calculator:

1. *Set up a HP 9820A Calculator, HP 11224A PCII ROM, HP 59405A HP-IB Calculator Interface, HP 10631A/B/C/D HP-IB Cable, and HP 59306A Relay Actuator for operation.*
2. *Set HP 59306A controls as follows:*

   Address Switch — 10001 (1,Q)
   Front Panel Relay Switch — 1, 3, 5 — IN
   — 2, 4, 6 — OUT

3. *Initialize HP 59306A by removing ac power, then reapplying power.*
4. *Type in program as following: (Note strange character in line 5 is made by TRACE key).*

```
0:
DSP "CHECK POINT
 1"⊢
1:
STP ⊢
2:
CMD "?U1","B135"
⊢
3:
DSP "CHECK POINT
 2"⊢
4:
STP ⊢
5:
CMD "?U1","B135"
,"3"⊢
6:
DSP "CHECK POINT
 3"⊢
7:
STP ⊢
8:
CMD "?U1","A"⊢
9:
1→X⊢
10:
FMT FXD *.0;WRT
13,X⊢
11:
STP ⊢
12:
X+1→X⊢
13:
IF X≤6;GTO 10⊢
14:
DSP "CHECK POINT
 4"⊢
15:
STP ⊢
16:
CMD "?U1","B9","
?","A246"⊢
17:
DSP "CHECK POINT
 5"⊢
18:
STP ⊢
19:
CMD "?U1","A9"⊢
20:
DSP "CHECK POINT
 6"⊢
21:
STP ⊢
22:
CMD "?U1","B"⊢
23:
6→Y⊢
24:
FMT FXD *.0;WRT
13,Y⊢
25:
STP ⊢
26:
Y-1→Y⊢
27:
IF Y>0;GTO 24⊢
28:
DSP "CHECK POINT
 7"⊢
29:
STP ⊢
30:
CMD "U","A246"⊢
31:
DSP "CHECK POINT
 8"⊢
32:
STP ⊢
33:
END ⊢
```

Figure 5-2. Program Listing

5. Press END and LIST keys on HP 9820A. Compare listing with *Figure 5-2* for accuracy.
6. Press END and RUN PROGRAM keys. As CHECK POINT's appear on calculator display, verify operation of HP 59306A with CHECK POINT explanations in steps d through k. To continue program after each CHECK POINT, press RUN PROGRAM KEY.

Table 5-3. HP-IB Verification Program Using HP 9820A or HP 9830A Calculator (Continued)

c. Verification Using HP 9830A Calculator:

1. Set-up a HP 9830A Calculator, HP 9866A Printer, HP 11272B Extended I/O ROM, HP 59405A HP-IB Calculator Interface, HP 10631A/B/C/D HP-IB Cable, and HP 59306A Relay Actuator for operation.
2. Set HP 59306A controls as follows:

   Address Switch — 10001 (1,Q)
   Front Panel Relay Switch — 1, 3, 5 — IN
   — 2, 4, 6 — OUT

3. Initialized HP 59306A by removing ac power, then reapplying power.
4. Type in program of *Figure 5-3.*

```
10 DISP "CHECK POINT 1"
20 STOP
30 CMD "?U1","B135"
40 DISP "CHECK POINT 2"
50 STOP
60 CMD "?U1","B135","?U"
70 FORMAT 3B
80 OUTPUT (13,70)256,17,512;
90 DISP "CHECK POINT 3"
100 STOP
110 CMD "?U1","A"
120 FORMAT F2.0
130 FOR I=1 TO 6
140 OUTPUT (13,120)I;
150 WAIT 1000
160 NEXT I
170 DISP "CHECK POINT 4"
180 STOP
190 CMD "?U1","B9","?","A246"
200 DISP "CHECK POINT 5"
210 STOP
220 CMD "?U1","A9"
230 DISP "CHECK POINT 6"
240 STOP
250 CMD "?U1","B"
260 FOR J=6 TO 1 STEP -1
270 OUTPUT (13,120)J;
280 WAIT 1000
290 NEXT J
300 DISP "CHECK POINT 7"
310 STOP
320 CMD "U","A246"
330 DISP "CHECK POINT 8"
340 STOP
350 END
```

Figure 5-3. Program Listing

5. Press LIST and EXECUTE keys on HP 9830A. Compare listing with *Figure 5-3* for accuracy.
6. Press RUN and EXECUTE keys. As CHECK POINTS appear on calculator display, verify operation of HP 59306A with CHECK POINT explanations in Step d through k. To continue program after each CHECK POINT, press CONT and EXECUTE keys.

Table 5-3. HP-IB Verification Program Using HP 9820A or HP 9830A Calculator (Continued)

d. CHECK POINT 1.

1. On light should be on and remain on through test.
2. REMOTE light should be off.
3. Relay indicator lights 1, 3, 5 should be on and relay indicator lights 2, 4, 6 should be off.

e. CHECK POINT 2.

1. REMOTE light should be on.
2. All relay indicator lights should be off.
3. Press LOCAL RESET on HP 59306A front panel. Relay lights 1, 3, 5 should now be on, relay lights 2, 4, 6, and REMOTE light should now be off.

f. CHECK POINT 3.

1. REMOTE light should be on and remain on through remainder of test.
2. All relay indicator lights should be off.
3. Press LOCAL RESET. All relay lights should remain off.
4. When program is continued, relay lights should light sequentially 1 through 6. On HP 9820A, press RUN PROGRAM key after each relay indicator lights.

g. CHECK POINT 4.

1. All relay lights should be on.
2. When program is continued, all relay lights should go off simultaneoulsy.

h. CHECK POINT 5.

1. All relay lights should be off.
2. When program is continued, all relay lights should light simultaneoulsy.

i. CHECK POINT 6.

1. All relay lights should be on.
2. When program is continued, relay lights should go off sequentially 6 through 1. On HP 9820A, press RUN PROGRAM key after each relay indicator goes off.

j. CHECK POINT 7.

1. All relay lights should be off.
2. Press STOP key on calculator.

k. CHECK POINT 8.

1. All relay lights should be off.

PERFORMANCE CHECK TEST CARD

HEWLETT-PACKARD MODEL 59306A
RELAY ACTUATOR

Test Performed By _____

Instrument Serial No. _____ *Date* _____

1. REMOTE indicator illuminates and extinguishes per steps a through f, *Table 5-2.* _____

2. Relays and indicator lights function properly in MANUAL mode per ste g, *Table 5-2.* _____

3. Relays and indicator lights function properly in REMOTE mode per step h, *Table 5-2.* _____

SECTION VI
REPLACEABLE PARTS

6-1. INTRODUCTION

6-2. This section contains information for ordering replaceable parts. *Table 6-1* lists replaceable parts for the Relay Actuator. *Table 6-2* lists the mechanical parts. *Figure 6-1* identifies the cabinet parts. *Table 6-3* contains a list of manufacturers and their respective codes.

6-3. Parts are listed in alphanumerical order of their reference designator starting with A1 and ending with chassis and miscellaneous parts. The replaceable parts table includes the following information.

a. Reference designator (when applicable).

b. HP part number.

c. Part number check digit (CD).

d. Total quantity (Qty) used in the instrument.

e. Description of the part (see Reference Designations and Abbreviations on page 6-2).

f. A typcial manufacturer of the part in a five-digit code.

g. The manufacturer's number for the part.

6-4. ORDERING INFORMATION

6-5. To obtain replacement parts, address order of inquiry to your local Hewlett-Packard Sales and Service Office. Identify parts by their Hewlett-Packard part number.

6-6. To obtain a part that is not listed, include:

a. Instrument model number.

b. Instrument serial number.

c. Description of the part.

d. Function and location of the part.

REFERENCE DESIGNATIONS

A = assembly
AT = attenuator; isolator; termination
B = fan; motor
BT = battery
C = capacitor
CP = coupler
CR = diode; diode thyristor; varactor
DC = directional coupler
DL = delay line
DS = annunciator; signaling device (audible or visual); lamp; LED
E = miscellaneous electrical part
F = fuse
FL = filter
H = hardware
HY = circulator
J = electrical connector (stationary portion); jack
K = relay
L = coil; inductor
M = metre
MP = miscellaneous mechanical part
P = electrical connector (movable portion); plug
Q = transistor; SCR; triode thyristor
R = resistor
RT = thermistor
S = switch
T = transformer
TB = terminal board
TC = thermocouple
TP = test point
U = integrated circuit; microcircuit
V = electron tube
VR = voltage regulator; breakdown diode
W = cable; transmission path; wire
X = socket
Y = crystal unit-piezo-electric
Z = tuned cavity; tuned circuit

ABBREVIATIONS

A = ampere
ac = alternating current
ACCESS = accessory
ADJ = adjustment
A/D = analog-to-digital
AF = audio frequency
AFC = automatic frequency control
AGC = automatic gain control
AL = aluminum
ALC = automatic level control
AM = amplitude modulation
AMPL = amplifier
APC = automatic phase control
ASSY = assembly
AUX = auxiliary
AVG = average
AWG = american wire gauge
BAL = balance
BCD = binary coded decimal
BD = board
BE CU = beryllium copper
BFO = beat frequency oscillator
BH = binder head
BKDN = breakdown
BP = bandpass
BPF = bandpass filter
BRS = brass
BWO = backward-wave oscillator
CAL = calibrate
ccw = counterclockwise
CER = ceramic
CHAN = channel
cm = centimeter
CMO = coaxial
COEF = coefficient
COM = common
COMP = composition
COMPL = complete
CONN = connector
CP = cadmium plate
CRT = cathode-ray tube
CTL = complementary transistor logic
CW = continuous wave
cw = clockwise
D/A = digital-to-analog
dB = decibel
dBm = decibel referred to 1 mW
dc = direct current
deg = degree (temperature interval or difference)
° = degree (plane angle)
°C = degree Celsius (centrigrade)
°F = degree Fahrenheit
°K = degree Kelvin
DEPC = deposited carbon
DET = detector
diam = diameter
DIA = diameter (used in parts list)
DIFF AMPL = differential amplifier
div = division
DPDT = double-pole, double-throw
DR = drive
DSB = double sideband
DTL = diode transistor logic
DVM = digital voltmeter
ECL = emitter coupled logic
EMF = electromotive force
EDP = electronic data processing
ELECT = electrolytic
ENCAP = encapsulated
EXT = external
F = farad
FET = field-effect transistor
F/F = flip-flop
FH = flat head
FOL H = fillister head
FM = frequency modulation
FP = front panel
FREQ = frequency
FXD = fixed
g = gram
GE = germanium
GHz = gigahertz
GL = glass
GND = ground(ed)
H = henry
h = hour
HET = heterodyne
HEX = hexagonal
HD = head
HDW = hardware
HF = high frequency
HG = mercury
HI = high
HP = Hewlett-Packard
HPF = high pass filter
HR = hour (used in parts list)
HV = high voltage
Hz = hertz
IC = integrated circuit
ID = inside diameter
IF = intermediate frequency
IMPG = impregnated
in = inch
INCD = incandescent
INCL = include(s)
INP = input
INS = insulation
INT = internal
kg = kilogram
kHz = kilohertz
kΩ = kilohm
kV = kilovolt
lb = pound
LC = inductance-capacitance
LED = light-emitting diode
LF = low frequency
LG = long
LH = left hand
LIM = limit
LIN = linear taper (used in parts list)
lin = linear
LK WASH = lockwasher
LO = low; local oscillator
LOG = logarithmic taper (used in parts list)
log = logarithm(ic)
LPF = low pass filter
LV = low voltage
m = metre (distance)
mA = milliampere
MAX = maximum
MΩ = megohm
MEG = meg (10^6) (used in parts list)
MET FLM = metal film
MET OX = metal oxide
MF = medium frequency; microfarad (used in parts list)
MFR = manufacturer
mg = milligram
MHz = megahertz
mH = millihenry
mho = conductance
MIN = minimum
min = minute (time)
' = minute (plane angle)
MINAT = miniature
mm = millimetre
MOD = modulator
MOM = momentary
MOS = metal-oxide semiconductor
ms = millisecond
MTG = mounting
MTR = meter (indicating device)
mV = millivolt
mVac = millivolt, ac
mVdc = millivolt, dc
mVpk = millivolt, peak
mVp-p = millivolt, peak-to-peak
mVrms = millivolt, rms
mW = milliwatt
MUX = multiplex
MY = mylar
μA = microampere
μF = microfarad
μH = microhenry
μmho = micromho
μs = microsecond
μV = microvolt
μVac = microvolt, ac
μVdc = microvolt, dc
μVpk = microvolt, peak
μVp-p = microvolt, peak-to-peak
μVrms = microvolt, rms
μW = microwatt
nA = nanoampere
NC = no connection
N/C = normally closed
NE = neon
NEG = negative
nF = nanofarad
NI PL = nickel plate
N/O = normally open
NOM = nominal
NORM = normal
NPN = negative-positive-negative
NPO = negative-positive zero (zero temperature coefficient)
NRFR = not recommended for field replacement
ns = nanosecond
NSR = not separately replaceable
nW = nanowatt
OBD = order by description
OD = outside diameter
OH = oval head
OP AMPL = operational amplifier
OPT = option
OSC = oscillator
OX = oxide
oz = ounce
Ω = ohm
P = peak (used in parts list)
PAM = pulse-amplitude modulation
PC = printed circuit
PCM = pulse-code modulation; pulse-count modulation
PDM = pulse-duration modulation
pF = picofarad
PH BRZ = phosphor bronze
PHL = phillips
PIN = positive-intrinsic-negative
PIV = peak inverse voltage
pk = peak
PL = phase lock
PLO = phase lock oscillator
PM = phase modulation
PNP = positive-negative-positive
P/O = part of
POLY = polystyrene
PORC = porcelain
POS = positive; position(s) (used in parts list)
POSN = position
POT = potentiometer
p-p = peak-to-peak
PP = peak-to-peak (used in parts list)
PPM = pulse-position modulation
PREAMPL = preamplifier
PRF = pulse-repetition frequency
PRR = pulse repetition rate
ps = picosecond
PT = point
PTM = pulse-time modulation
PWM = pulse-width modulation
PWV = peak working voltage
RC = resistance capacitance
RECT = rectifier
REF = reference
REG = regulated
REPL = replaceable
RF = radio frequency
RFI = radio frequency interference
RH = round head; right hand
RLC = resistance-inductance-capacitance
RMO = rack mount only
rms = root-mean-square
RND = round
ROM = read-only memory
R&P = rack and panel
RWV = reverse working voltage
S = scattering parameter
s = second (time)
" = second (plane angle)
S-B = slow-blow fuse (used in parts list)
SCR = silicon controlled rectifier; screw
SE = selenium
SECT = sections
SEMICON = semiconductor
SHF = superhigh frequency
SI = silicon
SIL = silver
SL = slide
SNR = signal-to-noise ratio
SPDT = single-pole, double-throw
SPG = spring
SR = split ring
SPST = single-pole, single-throw
SSB = single sideband
SST = stainless steel
STL = steel
SQ = square
SWR = standing-wave ratio
SYNC = synchronize
T = timed (slow-blow fuse)
TA = tantalum
TC = temperature compensating
TD = time delay
TERM = terminal
TFT = thin-film transistor
TGL = toggle
THD = thread
THRU = through
TI = titanium
TOL = tolerance
TRIM = trimmer
TSTR = transistor
TTL = transistor-transistor logic
TV = television
TVI = television interference
TWT = traveling wave tube
U = micro (10^{-6}) used in parts list)
UF = microfarad (used in parts list)
UHF = ultrahigh frequency
UNREG = unregulated
V = volt
VA = voltampere
Vac = volts ac
VAR = variable
VCO = voltage-controlled oscillator
Vdc = volts dc
VDCW = volts, dc, working (used in parts list)
V(F) = volts, filtered
VFO = variable-frequency oscillator
VHF = very-high frequency
Vpk = volts peak
Vp-p = volts peak-to-peak
Vrms = volts rms
VSWR = voltage standing wave ratio
VTO = voltage-tuned oscillator
VTVM = vacuum-tube voltmeter
V(X) = volts, switched
W = watt
W/ = with
WIV = working inverse voltage
WW = wirewound
W/O = without
YIG = yttrium-iron-garnet
Zo = characteristic impedance

NOTE

All abbreviations in the parts list will be in upper case.

MULTIPLIERS

Abbreviation	Prefix	Multiple
T	tera	10^{12}
G	giga	10^{9}
M	mega	10^{6}
k	kilo	10^{3}
da	deka	10
d	deci	10^{-1}
c	centi	10^{-2}
m	milli	10^{-3}
μ	micro	10^{-6}
n	nano	10^{-9}
p	pico	10^{-12}
f	femto	10^{-15}
a	atto	10^{-18}

Table 6-1. Replaceable Parts, 59306A Relay Actuator

Reference Designation	HP Part Number	C D	Qty	Description	Mfr Code	Mfr Part Number
A1	59306-60006	0	1	BD AY, CONTROL (SERIES 2536)	28480	59306-60006
A1C1	0180-1701	2	1	CAPACITOR-FXD 6.8UF +-20% 6VDC TA	56289	160D685X006A2
A1C2	0180-2101	8	1	CAPACITOR-FXD 4000UF +-75%-10% 15VDC AL	28480	0180-2101
A1C3	0140-0192	9	2	CAPACITOR-FXD 68PF +-5% 300VDC MICA	72136	DM153680J0300WV1CR
A1C4	0160-4084	8	2	CAPACITOR-FXD .1UF +-20% 50VDC CER	28480	0160-4084
A1C5	0140-0192	8	2	CAPACITOR-FXD 68PF +-5% 300VDC MICA	72136	DM15E680J0300WV1CR
A1C6	0140-0149	6	1	CAPACITOR-FXD 470PF +-5% 300VDC MICA	72136	DM15F471J0300WV1CR
A1C7	0160-3879	7	4	CAPACITOR-FXD .01UF +-20% 100VDC CER	28480	0160-3879
A1C8	0160-3879	7		CAPACITOR-FXD .01UF +-20% 100VDC CER	28480	0160-3879
A1C9	0160-3879	7		CAPACITOR-FXD .01UF +-20% 100VDC CER	28480	0160-3879
A1C10	0160-3879	7		CAPACITOR-FXD .01UF +-20% 100VDC CER	28480	0160-3879
A1C11	0160-4084	8		CAPACITOR-FXD .1UF +-20% 50VDC CER	28480	0160-4084
A1C12	0180-4132	9	1	CAPACITOR-FXD 6.8UF +-10% 35VDC TA	56289	150D685X9035B2
A1C13	0180-1735	2	1	CAPACITOR-FXD .22UF +-10% 35VDC TA	56289	150D224X9035A2
A1CR1	1901-0040	1	1	DIODE-SWITCHING 30V 50MA 2NS DO-35	28480	1901-0040
A1CR2	1901-0327	7	2	DIODE-PWR RECT 200V 1A 6US	03508	A14B
A1CR3	1901-0327	7		DIODE-PWR RECT 200V 1A 6US	03508	A14B
A1J2	1200-0473	8	2	SOCKET-IC 16-CONT DIP DIP-SLDR	28480	1200-0473
A1J3	1200-0473	8		SOCKET-IC 16-CONT DIP DIP-SLDR	28480	1200-0473
A1Q1	1843-0071	7	1	TRANSISTOR NPN SI PD=300MW FT=200MHZ	28480	1854-0071
A1R1	1810-0136	3	2	NETWORK RES, 10-SIP MULTI-VALUE	28480	1810-0136
A1R2	1810-0136	3		NETWORK RES, 10-SIP MULTI-VALUE	28480	1810-0136
A1R3	1810-0041	9	1	NETWORK RES 9-SIP 2.7K OHM X 8	28480	1810-0041
A1R4	0683-2035	3	3	RESISTOR 20K 5% .25W FC TC=-400/800	01121	CB2035
A1R5	0683-2035	3		RESISTOR 20K 5% .25W FC TC=-400/800	01121	CB2035
A1R6	0683-5125	8	10	RESISTOR 5.1K 5% .25W FC TC=-400/+700	01121	CB5125
A1R7	0757-0898	9	2	RESISTOR 82 2% .125W F TC=0+-100	24546	C4-1/8-T0-82R0-G
A1R8	0683-1215	9	1	RESISTOR 120 5% .25W FC TC=-400/+600	01121	CB1215
A1R9	0683-2035	3		RESISTOR 20K 5% .25W FC TC=-400/800	01121	CB2035
A1R10	0683-5125	8		RESISTOR 5.1K 5% .25W FC TC=-400/+700	01121	CB5125
A1R11	0683-5125	8		RESISTOR 5.1K 5% .25W FC TC=-400/+700	01121	CB5125
A1R12	0683-1025	9	1	RESISTOR 1K 5% .25W FC TC=-400/+600	01121	CB1025
A1R13	0683-5125	8		RESISTOR 5.1K 5% .25W FC TC==-400/+700	01121	CB5125
A1R14	0683-5125	8		RESISTOR 5.1K 5% .25W FC TC==-400/+700	01121	CB5125
A1R15	0683-5125	8		RESISTOR 5.1K 5% .25W FC TC==-400/+700	01121	CB5125
A1R16	0683-5125	8		RESISTOR 5.1K 5% .25W FC TC==-400/+700	01121	CB5125
A1R17	0683-5125	8		RESISTOR 5.1K 5% .25W FC TC==-400/+700	01121	CB5125
A1R18	0683-5125	8		RESISTOR 5.1K 5% .25W FC TC==-400/+700	01121	CB5125
A1R19	0683-5125	8		RESISTOR 5.1K 5% .25W FC TC==-400/+700	01121	CB5125
A1R20	0683-4715	0	1	RESISTOR 470 5% .25W FC TC=-400/+600	01121	CB4715
A1R21	0683-1525	4	1	RESISTOR 1.5K 5% .25W FC TC=-400/+700	01121	CB1525
A1R22	0683-2725	8	1	RESISTOR 2.7K 5% .25W FC TC=-400/+700	01121	CB2725
A1R23	0757-0898	9		RESISTOR 82 2% .125W F TC=0+-100	24546	C4-1/8-T0-82R0-G
A1S2	1200-0485	2	1	SOCKET-IC 14-CONT DIP DIP-SLDR	28480	1200-0485
A1S2	3101-1973	7	1	SWITCH-SL 7-1A DIP-SLIDE ASSY .1A 50VDC	28480	3101-1973
A1S3	3101-0537	7	1	SWITCH-SL DPDT STD 1.5A 250VAC PC	28480	3101-0537
A1U1	1820-1056	9	1	IC SCHMITT-TRIG TTL NAND QUAD 2-INP	01295	SN74132N
A1U2	1820-1415	4	1	IC SCHMITT-TRIG TTL LS NAND DUAL 4-INP	01295	SN74LS13N
A1U3	1820-1112	8	6	IC FF TTL LS D-TYPE POS-EDGE TRIG	01295	SN74LS74AN
A1U4	1820-0904	4	1	IC COMPTR TTL L MAGTD 5-BIT	07263	93L24PC
A1U5	1820-1112	8		IC FF TTL LS D-TYPE POS-EDGE-TRIG	01295	SN74LS74AN
A1U6	1820-1199	1	2	IC INV TTL LS HEX 1-INP	01295	SN74LS04N
A1U7	1820-1418	7	1	IC DCDR TTL LS BCD-TO-DEC 4-TO-10 LINE	01295	SN74LS24N
A1U8	1820-1202	7	1	IC GATE TTL LS NAND TPL 3-INP	01295	SN74LS10N
A1U9	1820-0070	5	1	IC GATE TTL NAND 8-INP	01295	SN7430N
A1U10	1820-1416	5	3	IC SCHMITT-TRIG TTL LS INV HEX 1-INP	01295	SN74LS14N
A1U11	1820-1197	9	7	IC GATE TTL LS NAND QUAD 2-INP	01295	SN74LS00N
A1U12	1820-1197	9		IC GATE TTL LS NAND QUAD 2-INP	01295	SN74LS00N
A1U13	1820-0515	3	1	IC MV TTL MONOSTBL RETRIG/RESET DUAL	04713	MC8602P
A1U14	1820-1204	9	1	IC GATE TTL LS NAND DUAL 4-INP	01295	SN74LS20N
A1U15	1820-1416	5		IC SCHMITT-TRIG TTL LS INV HEX 1-INP	01295	SN74LS14N

See introduction to this section for ordering information
*Indicates factory selected value

Table 6-1. Replaceable Parts, 59306A Relay Actuator

Reference Designation	HP Part Number	C D	Qty	Description	Mfr Code	Mfr Part Number
A1U16	1820-1416	5		IC SCHMITT-TRIG TTL LS INV HEX 1-INP	01295	SN74LS14N
A1U17	1820-1112	8		IC-FF TTL LS D-TYPE POS-EDGE-TRIG	01295	S74LS74AN
A1U18	1820-1197	9		IC GATE TTL LS NAND QUAD 2-INP	01295	SN74LS00N
A1U19	1820-1197	9		IC GATE TTL LS NAND QUAD 2-INP	01295	SN74LS00N
A1U20	1820-1112	8		IC FF TTL LS D-TYPE POS-EDGE-TRIG	01295	SN74LS74AN
A1U21	1820-0621	2	3	IC BFR TTL NAND QUAD 2-INP	01295	SN7438N
A1U22	1820-0621	2		IC BFR TTL NAND QUAD 2-INP	01295	SN7438N
A1U23	1820-0471	0	1	IC INV TTL HEX 1-INP	01295	SN7406N
A1U24	1820-1112	8		IC-FF TTL LS D-TYPE POS-EDGE-TRIG	01295	S74LS74AN
A1U25	1820-1197	9		IC GATE TTL LS NAND QUAD 2-INP	01295	SN74LS00N
A1U26	1820-1197	9		IC GATE TTL LS NAND QUAD 2-INP	01295	SN74LS00N
A1U27	1820-0621	2		IC BFR TTL NAND QUAD 2-INP	01295	SN7438N
A1U28	1820-1197	9		IC GATE TTL LS NAND QUAD 2-INP	01295	SN74LS00N
A1U29	1820-1199	1		IC INV TTL LS HEX 1-INP	01295	SN74LS04N
A1U30	1820-1112	8		IC FF TTL LS D-TYPE POS-EDGE-TRIG	01295	SN74LS74AN
A1U31	1826-0122	0	1	IC 7805 V RGLTR TO-220	07263	7805UC
	0360-0065	1	4	TERMINAL-STUD FKD-TUR SWGFRM-MTG	28480	0360-0065
	0360-0124	3	2	CONNECTOR-SGL CONT PIN .04-IN-BSC-SZ RND	28480	0360-0124
	0380-0161	0	5	STANDOFF-RVT-ON .625-IN-LG 6-32 THD	00000	ORDER BY DESCRIPTION
	0380-0342	9	3	STANDOFF-RVT-ON .125-IN-LG 6-32 THD	00000	ORDER BY DESCRIPTION
	1251-3283	1	1	CONNECTOR 24-PIN F MICRORIBBON	28480	1251-3283
	1530-1098	4	2	CLEVIS 0.070-IN W SLT, 0.454-IN PIN CTR	00000	ORDER BY DESCRIPTION

See introduction to this section for ordering information
*Indicates factory selected value

Table 6-1 Replaceable Parts, HP 59306A Relay Actuator (Continued)

Reference Designation	HP Part Number	C D	Qty	Description	Mfr Code	Mfr Part Number
A2	59306-60002	6	1	BOARD ASSEMBLY, RELAY	28480	59306-60002
A2C1	0160-0676	6	1	CAPACITOR-FXD .0018UF +-10% 200WVDC	45289	292P10352
A2C2 thru C12				NOT ASSIGNED		
A2C13	0170-0055	6	1	CAPACITOR-FXD .1UF +-20% 200WVDC	56289	292P10402
A2CR1	1902-3311	7	6	DIODE, VREG 38.3V VZ .4W MAX	28480	1902-3311
A2CR2	1902-3311	7		DIODE, VREG 38.3V VZ .4W MAX	28480	1902-3311
A2CR3	1902-3311	7		DIODE, VREG 38.3V VZ .4W MAX	28480	1902-3311
A2CR4	1902-3311	7		DIODE, VREG 38.3V VZ .4W MAX	28480	1902-3311
A2CR5	1902-3311	7		DIODE, VREG 38.3V VZ 4W MAX	28480	1902-3311
A2CR6	1902-3311	7		DIODE, VREG 38.3V VZ .4W MAX	28480	1902-3311
A2J1	1200-0423	8		SOCKET-IC BLACK 16-CONTACT	23880	CSA2900-16B
A2K1	0490-0509	3	6	RELAY, 6VDC, CONT 10A 120VAC FORM 1C	12300	5A5DG-6
A2K2	0490-0509	3		RELAY, 6VDC, CONT 10A 120VAC FORM 1C	12300	5A5DG-6
A2K3	0490-0509	3		RELAY, 6VDC, CONT 10A 120VAC FORM 1C	12300	5A5DG-6
A2K4	0490-0509	3		RELAY, 6VDC, CONT 10A 120VAC FORM 1C	12300	5A5DG-6
A2K5	0490-0509	3		RELAY, 6VDC, CONT 10A 120VAC FORM 1C	12300	5A5DG-6
A2K6	0490-0509	3		RELAY, 6VDC, CONT 10A 120VAC FORM 1C	12300	5A5DG-6
A2Q1	1854-0039	7	6	TRANSISTOR, 2N3053 NPN SI	04713	2N3053
A2Q2	1854-0039	7		TRANSISTOR, 2N3053 NPN SI	04713	2N3053
A2Q3	1854-0039	7		TRANSISTOR, 2N3053 NPN SI	04713	2N3053
A2Q4	1854-0039	7		TRANSISTOR, 2N3053 NPN SI	04713	2N3053
A2Q5	1854-0039	7		TRANSISTOR, 2N3053 NPN SI	04713	2N3053
A2Q6	1854-0039	7		TRANSISTOR, 2N3053 NPN SI	04713	2N3053
A2R1	0683-4715	0	6	RESISTOR-FXD 470 OHMS 5% .25W CC	01121	CB4715
A2R2	0683-4715	0		RESISTOR-FXD 470 OHMS 5% .25W CC	01121	CB4715
A2R3	0683-4715	0		RESISTOR-FXD 470 OHMS 5% .25W CC	01121	CB4715
A2R4	0683-4715	0		RESISTOR-FXD 470 OHMS 5% .25W CC	01121	CB4715
A2R5	0683-4715	0		RESISTOR-FXD 470 OHMS 5% .25W CC	01121	CB4715
A2R6	0683-4715	0		RESISTOR-FXD 470 OHMS 5% .25W CC	01121	CB4715
A2R7	0186-1505	6	6	RESISTOR-FXD 15 OHMS 5% .5W CC TUBULAR	01121	EB1505
A2R8	0186-1505	6		RESISTOR-FXD 15 OHMS 5% .5W CC TUBULAR	01121	EB1505
A2R9	0186-1505	6		RESISTOR-FXD 15 OHMS 5% .5W CC TUBULAR	01121	EB1505
A2R10	0186-1505	6		RESISTOR-FXD 15 OHMS 5% .5W CC TUBULAR	01121	EB1505
A2R11	0186-1505	6		RESISTOR-FXD 15 OHMS 5% .5W CC TUBULAR	01121	EB1505
A2R12	0186-1505	6		RESISTOR-FXD 15 OHMS 5% .5W CC TUBULAR	01121	EB1505
A2W1	59306-60004	8	1	CABLE ASSEMBLY, RELAY	28480	59306-60004
	0380-0059	9	4	SPACER, CAPTIVE	28480	0380-0059

See introduction to this section for ordering information
*Indicates factory selected value

Table 6-1. Replaceable Parts, HP 59306A Relay Actuator (Continued)

Reference Designation	HP Part Number	C D	Qty	Description	Mfr Code	Mfr Part Number
A3	59306-60005	9	1	BOARD ASSEMBLY, SWITCH	28480	59306-60005
A3C1	0160-4554	7	1	CAPACITOR-FXD .01UF +-20% 50VDC CER	28480	0160-4554
A3DS1	1990-0486	4	1	LED-LAMP LUM-INT=2MCD IF=25MA-MAX BVR=5V	28480	1990-0486
A3J1	1200-0473	8	1	SOCKET-IC 16-CONT DIP DIP-SLDR	28480	1200-0473
A3MP1	0371-3585	9	6	KEY CAP COVER - CLEAR	28480	0371-3585
A3MP2	2200-0521	8	4	SCREW-MACH 4-40	00000	ORDER BY DESCRIPTION
A3R1	0757-0401	0	7	RESISTOR 100 1% .125W F TC=0+-100	24546	C4-1/8-T0-101-F
A3R2	0757-0401	0		RESISTOR 100 1% .125W F TC=0+-100	24546	C4-1/8-T0-101-F
A3R3	0757-0401	0		RESISTOR 100 1% .125W F TC=0+-100	24546	C4-1/8-T0-101-F
A3R4	0757-0401	0		RESISTOR 100 1% .125W F TC=0+-100	24546	C4-1/8-T0-101-F
A3R5	0757-0401	0		RESISTOR 100 1% .125W F TC=0+-100	24546	C4-1/8-T0-101-F
A3R6	0757-0401	0		RESISTOR 100 1% .125W F TC=0+-100	24546	C4-1/8-T0-101-F
A3R7	0757-0401	0		RESISTOR 100 1% .125W F TC=0+-100	24546	C4-1/8-T0-101-F
A3R8	0698-3444	1	1	RESISTOR 316 1% .125W F TC=0+-100	24546	C4-1/8-T0-101-F
A3S1	3101-2824	9	1	SWITCH-PB 6-STATION 15MM C-C SPACING	28480	3101-2824
A3S2	3101-2823	8	1	SWITCH, LOCAL/REMOTE	28480	3101-2823 LOCAL/REMOTE SWITCH W/CAP
A3W1	8120-0617	9	1	CABLE ASSY, 16-PIN	28480	8120-0617
A3XDS1	59306-40001	3	1	STANDOFF-LED	28480	59306-40001
				CHASSIS PARTS		
C1, C2	0160-4281	1	2	CAPACITOR-FXD DUAL 2200PF 20% 250VAC (RMS)	56289	0160-4281
F1	2110-0201	9	1	FUSE, 250MAT 250V 1.25 X .25	71400	MDL1/4
F1 (Alternate)	2110-0318	0	1	FUSE, 125MAT 250V 1.25 X .25	71400	MDL1/8
T1	9100-3025	8	1	TRANSFORMER, POWER	28480	9100-3025
W1	8120-1378	1	1	CABLE ASSY, POWER CORD	28480	8120-1378
W2	8120-0616	8	1	CABLE ASSY, FLAT RIBBON	28480	8120-0616
XF1A	2110-0564	8	1	FUSEHLDR, XTRA POST CAP, BAYONET 12A 250V	28480	2110-0564
XF1B	2110-0565	9	1	FUSEHLDR, XTRA POST CAP, BAYONET 12A 250V	28480	2110-0565
XF1C	2110-0569	3	1	FUSEHOLDER, MTG NUT HEX METRIC	28480	2110-0569
	2420-0001	5	18	NUT W/LKWR 6-32 THD .109-IN-THK	00000	ORDER BY DESCRIPTION
	0340-0732	7	18	INSULATOR-BINDING POST POLYC	28480	0340-0732
	0362-0187	2	1	TUBING-HS .50D	02145	TC4008
	0380-0644	4	2	STANDOFF-HEX .327-IN-LG 6-32	28480	0380-0644
	0515-0898	7	4	SCREW-M4 X 0.7 6MM-LG PANHD	00000	ORDER BY DESCRIPTION
	1510-0076	4	18	BINDING POST, SGLL-TUR JGK	28480	1510-0076
	2420-0022	0	4	NUT, 6-32 .23-IN-THK .354 STL	04507	NR632005
	3050-0066	8	18	WASHER-FLAT MTLC NO 6 .147-IN-ID	00000	ORDER BY DESCRIPTION
	5955-0928	1	2	LABEL, BLANK 1/2 X 1.25"	28480	5955-0928
	7120-4006	7	1	LABEL, FIRE WARNING	28480	7120-4006
	7120-4835	7	1	LABEL, CANADIAN	28480	7120-4835
	7120-8732	4	1	LABEL, SHOCK WARNING	28480	7120-8732
	59306-00004	8		BRACKET, SWITCH	28480	59306-00004
	59306-00005	3	1	SHIELD	28480	59306-00005
	59306-00006	4	1	INSULATING SHEET	28480	59306-00006
	59306-20003	3	1	HEATSINK	28480	59306-20003
	59307-00005	4	1	BRACKET-MOUNTING	28480	59307-00005
	59308-60007	3	1	STRAP-GROUND 2-IN.	28480	59308-60007

See introduction to this section for ordering information
*Indicates factory selected value

HP 59306A
Replaceable Parts

Table 6-1. Replaceable Parts, HP 59306A Relay Actuator (Continued)

Reference Designation	HP Part Number	C D	Qty	Description	Mfr Code	Mfr Part Number
				CABINET PARTS (SERIES 3002)		
MP1	59306-00007	5	1	PANEL, FRONT	28480	59306-00007
MP1A	59306-00008	6	1	PANEL, SUB-FRONT	28480	59306-00008
MP2	5041-8803	0	1	TRIM-TOP	28480	5040-7203
MP3	5021-8413	6	1	FRAME, FRONT (METRIC)	28480	5021-8413
MP4	5041-8801	8	4	FOOT	28480	5040-7201
MP5	5041-8809	6	1	COVER-BOTTOM	28480	5041-8809
MP6	5041-8812	1	2	COVER-SIDE	28480	5041-8812
MP7	59306-00003	1	1	PANEL-REAR	28480	59306-00003
MP8	5041-8808	5	1	COVER-TOP	28480	5041-8808
MP9	59306-00009	7	1	BRACKET-MAIN BOARD	28480	59306-00009
MP10	5001-0538	8	2	TRIM-SIDE	28480	5001-0538

Table 6-3. Manufacturers Code List

MFR NO	MANUFACTURER NAME	ADDRESS	ZIP CODE
00779	AMP IN (AIRCRAFT MARINE PROD)	HARRISBURG, PA	17101
00853	SANGAMO CAPACITOR DIVISION	PICKENS, SC	29671
00866	GOE ENGINEERING CO., INC	CITY OF INDUSTRY, CA	91746
01121	ALLEN BRADLEY CO.	MILWAUKEE, WI	53204
01295	TEXAS INSTR. INC.,SEMICONDUCTOR COMP	DALLAS, TX	75231
03508	GE CO. SEMICONDUCTOR PROD DEPT	SYRACUSE, NY	13201
04713	MOTOROLA SEMICONDUCTOR PROD IN.	PHOENIX, AZ	85008
05696	MICROWAVE ASSOCIATES, INC	BURLINGTON, MA	01803
07263	FAIRCHILD CAMERA & INST.CORP SEMICON DIV	MOUNTAINVIEW, CA	94040
09353	C&K COMPONENTS, INC	NEWTON, MA	02158
11237	CTS ELECTRONICS	PASO ROBLES, CA	93446
12300	POTTER & BRUMFIELD DIV AMF CANADA LTD	GUELPH ONTARIO, CANADA	-----
23880	STANFORD APPLIED ENGINEERING	SANTA CLARA, CA	95050
24546	CORNING GLASS WORKS	BRADFORD, PA	16701
27014	NATIONAL SEMICONDUCTOR CORP	SANTA CLARA, CA	95051
28480	HEWLETT-PACKARD CO, CORPORATE HQ	YOUR NEAREST HP OFFICE	
56289	SPRAGUE ELECTRIC CO	N. ADAMS, MA	01247
70903	BELDEN CORPORATION	CHICAGO, IL	60644
71279	CAMBRIDGE THERMIONICS CORP.	CAMBRIDGE, MA	02138
71400	LITTLEFUSE CORPORATION	DES PLAINS, IL	60016
71744	CHICAGO MINIATURE LAMP WORKS	CHICAGO, IL	60640
72136	ELECTRO MOTIVE MANUFACTURING CO., INC	WILLIMANTIC, CO	06226
82389	SWITCHCRAFT INCORPORATION	CHICAGO, IL	60630
95987	WECKESSER CON., INCORPORATED	CHICAGO, IL	60641

See introduction to this section for ordering information
*Indicates factory selected value

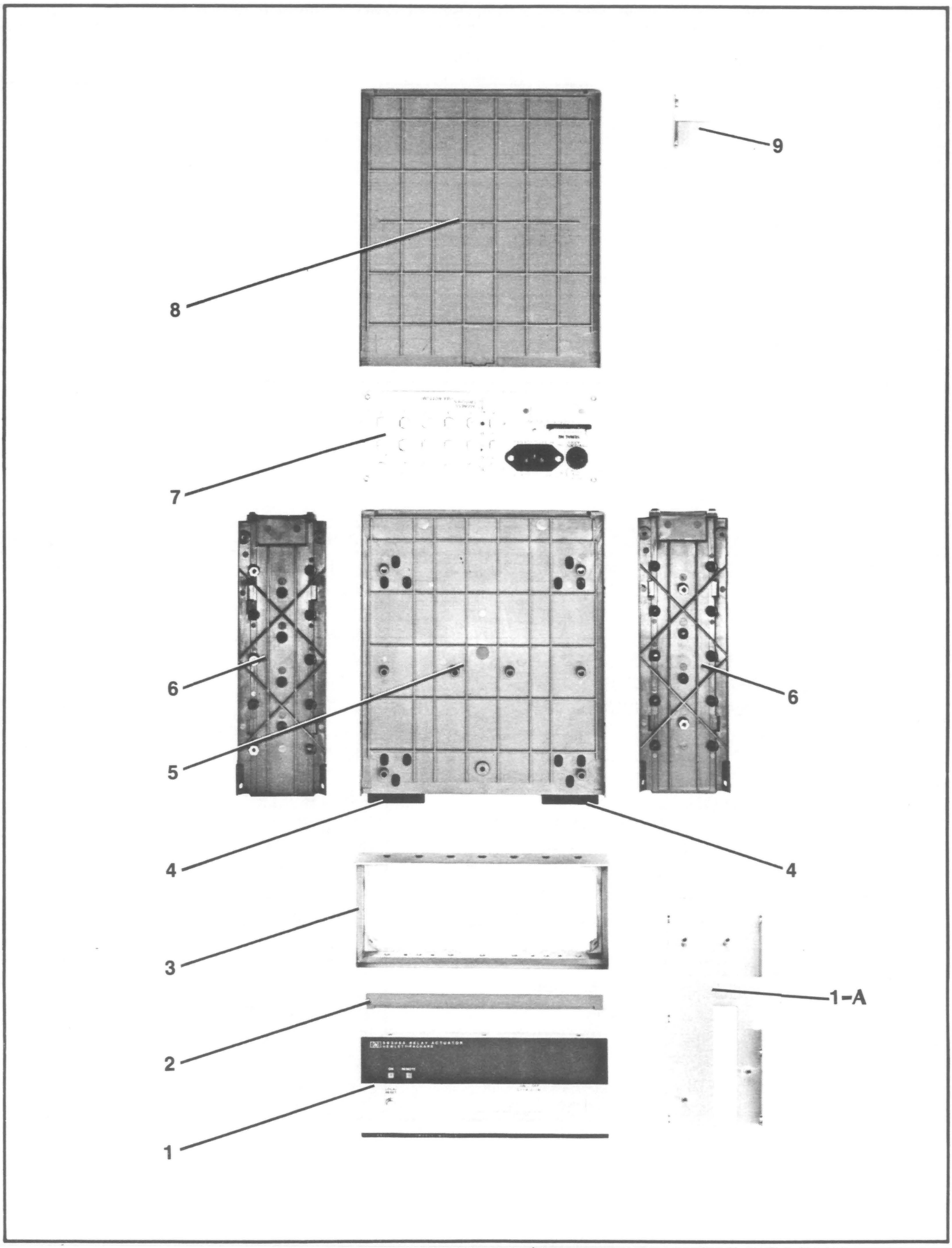

Figure 6-1. HP 59306A Cabinet Parts

SECTION VII
MANUAL CHANGES

7-1. INTRODUCTION

7-2. This section contains information for adapting this manual to instruments with serial prefixes other than that listed on the title page. Refer to Section I for additional important information about serial number coverage.

7-3. MANUAL CHANGES

7-4. Instruments having serial number prefixes higher than those listed on the title page of this manual are covered with a "Manual Changes" sheet included with this manual. If this change sheet is missing, the information can be supplied by any Hewlett-Packard Sales and Service Office listed at the back of this manual.

7-5. If your instrument's serial number prefix is lower than that listed on the title page of this manual, this manual must be modified to correctly apply to your instrument. To determine which changes must be made to this instrument, locate your instrument's serial number prefix in *Table 7-1* and make the indicated changes.

Table 7-1. Manual Backdating

IF YOUR HP 59306A HAS SERIAL PREFIX	THEN MAKE THE FOLLOWING CHANGES TO THIS MANUAL
3002A	NONE
2536A	1
2510A	1,2
1920A	1,2,3
1736A	1,2,3,4
1712A	1,2,3,4,5
1632A	1 - 6
1604A	1 - 7
1600A	1 - 8
1552A	1 - 9
1524A	1 - 10
1332A	1 - 11
1316A	1 - 12

CHANGE 1 Series 2536A

Table 6-1. Replaceable Parts, HP 59306A Relay Actuator (Continued)
Replace A1 page 6-7 with parts list shown on page 7-11.

CHANGE 2 Series 2510A

Table 6-1. Control Board Replaceable Parts
Replace A1 (59306-60001) Replaceable Parts List with the parts list shown in Table 7-1.

Table 6-1. A3 Switch Board Assembly
Delete the A3 Assembly (59306-60005) Replaceable Parts List.

Table 6-1. Chassis Parts
Add DS1,DS2, 2140-0043, Lamp-Indicator
Add S1, 3101-1261, Switch-Pushbutton
Add XDS1, XDS2, 05330-40002, Block-Annunciator

Table 6-2. 59306A Cabinet Parts
Change PANEL-FRONT from 59306-00007 to 59306-00001
Delete PANEL-FRONT, BUT 59306-00008
Delete BRACKET-MAIN BD, 59306-00009

Figure 8-3. 59306A Schematic Diagram
Replace A1 (59306-60001) Schematic Diagram and Component Locator with schematic and component locator shown in Figure 7-1.

Figure 8-4. 59306A A3 Switch Assembly Schematic Diagram
Delete A3 (59306-60005) Switch Assembly Schematic Diagram and Component Locator.

CHANGE 3 Series 1920A

Table 6-2. Cabinet Parts
Change item 3 from 5021-5813 (Metric) to 5020-8813 (English) FRAME, FRONT
Delete item 10, 0515-0898, SCREW

CHANGE 4 Series 1736A

Table 6-1. Chassis Parts
Change C1, C2 to C1A/B, 0160-3043, Capacitor-Fxd dual .005UF 300WVDC, 56289, 29C147A-CDH

Figure 8-3. A1 59306A Schematic Diagram
Change C1 and C2 to .005UF

CHANGE 5 Series 1712A

Table 6-1. A1 Control Board Assembly Replaceable Parts
Change C4, C6, and C11 to 0140-0192, Capacitor-Fxd, 68pF, ±5% 300VDC, 72136, DM15E680J0300WV1CR.
Delete C12, C13, R7, R23
Change U2 to 1820-0537, IC, TTL, Dual 4, 01295, SN7413N
Change U18 to 1820-0583, IC TTL LP Quad, 27014, DM74L00N
Change U10, U15, U16 to 1820-0586, IC, TTL LP Hex, 27014, DM74L04N
Change U14 to 1820-0537, IC, TTL Dual 4, 01295, SN7413N

Table 6-1. A2 Relay board Assembly Replaceable Parts
Change C1 to 0160-3333, Capacitor-Fxd, .005UF, ±5%, 250WVDC, Ceramic

CHANGE 5 Series 1712A (Continued)

Figure 8-3. A1 59306A Schematic Diagram

Delete A1J1 Pin 12 and wire connecting pin 12 to Chassis ground
Change C4 to 68pF
Change C6 to 68pF
Delete C12
Delete C13

CHANGE 6, Series 1632A

Table 6-1. A2 Relay Board Assembly Replaceable Parts

Add C1 through C12, Capacitor-Fxd, .01UF, ±5%, 200WVDC, 56289, 292P10352

Figure 8-3. 59306A A2 Relay Assembly Schematic Diagram

Add C1, .01UF between the brown wire (plus side of cap.) and the red wire (minus side of cap.) of K1.
Add C2, .01UF between the brown wire (minus side of cap) and the orange wire (plus side of cap) of K1.
Add C3, .01UF between the yellow wire (plus side of cap.) and the green wire (minus side of cap.) of K2.
Add C4, .01UF between the yellow wire (minus side of cap.) and blue wire (plus side of cap.) of K2.
Add C5, .01UF between the violet wire (plus side of cap.) and white wire (minus side of cap.) of K3.
Add C6, .01UF between the violet wire (minus side of cap.) and gray wire (plus side of cap.) of K3.
Add C7, .01UF between the white/black wire (plus side of cap.) and the white/brown wire (minus side of cap.) of K4.
Add C9, .01UF between the white/orange wire (plus side of cap.) and the white/yellow wire (minus side of cap.) of K5.
Add C10, .01UF between the white/orange wire (minus side of cap.) and the white/green wire (plus side of cap.) of K5.
Add C11, .01UF between the white/blue wire (plus side of cap.) and the white/violet wire (minus side of cap.) of K6.
Add C12, .01UF betwen the white/blue wire (minus side of cap.) and the white/gray (plus side of cap.) of K6.

CHANGE 7 Series 1604

Table 6-1. A1 Control Board Replaceable Parts

Change C4 to 0140-0191, Capacitor-Fxd, 56 pF, ±5%, 300WVDC, 72136, DM15E560300WVICR
Change C6 to 0160-2150, Capacitor-Fxd, 33pF, ±5%, 300WVDC, 28480,0160-2150
Delete C11
Change R8 to 0683-3915, Resistor-Fxd, 390 ohms, 5%, .5%, .25W CC, 01121, CB3915
Delete R23
Change U3, U5, U17, U20, U24, to 1820-0596, IC, TTL LP Dual D, 27014, DM74L74N
Change U6, U10, U15, U16, U29 to 1812-0586, IC, TTL LP Quad, 27014, DM74L04N
Change U7 1820-0777, IC, TTL LP, 01295, SN74LS42N
Change U11, U12, U18, U19, U25, U26, U28 to 1820-0583, IC, TTL, LP Quad, 27014, DM74L00N

Figure 8-3. A1 59306A Control Board Assembly Schematic Diagram

Change C4 to 56 pF
Change C6 to 33pF
Delete C11
Change R8 to 390 ohms
Delete R23

CHANGE 8 Series 1600A

Table 1-1. Equipment Supplied

Add HP Interface Bus Interconnect Cable HP Part Number 10631

Table 6-1. A2 Relay Board Assembly Replaceable Parts

Change C1 to 0160-0207, Capacitor-Fxd, .01UF ±5%, 200VWDC, 56289, 292P10352

Figure 8-3. A1 59306A Control Board Assembly Schematic Diagram

Change C1 to C1A and C1B; Connect C1A between chassis ground (green/yellow wire) and the white/black/brown wire (ac line in); Connect C1B between chassis ground (green/hello wire) and the white/gray wire (ac line in).

CHANGE 9 Series 1552A

Table 1-2. Specifications

Change Power Requirements to 115V or 230V ±10%, 50 to 400 Hz, 10V A max

CHANGE 10 Series 1524A

Change solder connections of wiring harness form relays to banana plug connectors to crimp on lugs.

CHANGE 11 Series 1332A

Table 6-1. A1 Control Board Replaceable Parts

Change A1S2 from 3101-1973 to 3101-1826, Switch Assembly, rocker, DIP (7) SPST, 00779, 435166-1.

Figure 8-3. A1 59306A Control Board Assembly Schematic Diagram

Change seven section switch (ADDRESS SWITCH) to show that it is not part of A1 assembly.
Change reference designator of switch to S2.

CHANGE 12 Series 1316A

Figure 6-1. Replaceable Parts, 59306A Relay Board

Add capacitors C7 through C10, 0160-3277, Capacitor-Fxd, Ceramic .01U 20% 50VDCW, 96733,G504BX103M
Add C7 through C10 to the +5 volt line from U31 pin 2.

Table 7-2. Replaceable Parts, HP 59306A Relay Actuator

Reference Designation	HP Part Number	C D	Qty	Description	Mfr Code	Mfr Part Number
A1	59306-60001	5	1	BD AY-CONTROL (SERIES 1736)	28480	59306-60001
A1C1	0180-1701	2	1	CAPACITOR-FXD 6.8UF+-20% 6VDC TA	56289	150D685X0006A2
A1C2	0180-2101	8	1	CAPACITOR-FXD 4000UF+75-10% 15VDC AL	28480	0180-2101
A1C3	0140-0192	9	2	CAPACITOR-FXD 68PF +-5% 300VDC MICA	72136	DM15E680J0300WV1CR
A1C4	0160-4084	8	2	CAPACITOR-FXD .1UF +-20% 50VDC CER	28480	0160-4084
A1C5	0140-0192	9		CAPACITOR-FXD 68PF +-5% 300VDC MICA	72136	DM15E680J0300WV1CR
A1C6	0140-0149	6	1	CAPACITOR-FXD 470PF +-5% 300VDC MICA	72136	DM15F471J0300WV1CR
A1C7	0160-3879	7	4	CAPACITOR-FXD, 0.01UF 20% 100VDCW CER	28480	0160-3879
A1C8	0160-3879	7		CAPACITOR-FXD, 0.01UF 20% 100VDCW CER	28480	0160-3879
A1C9	0160-3879	7		CAPACITOR-FXD, 0.01UF 20% 100VDCW CER	28480	0160-3879
A1C10	0160-3879	7		CAPACITOR-FXD, 0.01UF 20% 100VDCW CER	28480	0160-3879
A1C11	0160-4084	8		CAPACITOR-FXD .1UF +-20% 50VDC CER	28480	0160-4084
A1C12	0180-0116	1	1	CAPACITOR-FXD 6.8UF+-10% 35VDC TA	56289	150D685X9035B2
A1C13	0180-1735	2	1	CAPACITOR-FXD .22UF+-10% 35VDC TA	56289	150D224X9035A2
A1CR1	1901-0040	1	1	DIODE-SWITCHING 30V 50MA 2NS DO-35	28480	1901-0040
A1CR2	1901-0327	7	2	DIODE-PWR RECT 200V 1A 6US	03508	A14B
A1CR3	1901-0327	7		DIODE-PWR RECT 200V 1A 6US	03508	A14B
A1CR4	1901-0040	1	1	DIODE-SWITCHING 30V 50MA 2NS DO-35	28480	1901-0040
A1J1	1251-3283	1	1	CONNECTOR, 24-CONT, FEM MICRORIBBON	28480	1251-3283
A1J2	1200-0473	8	2	SOCKET-IC 16-CONT DIP DIP-SLDR	28480	1200-0473
A1J3	1200-0473	8		SOCKET-IC 16-CONT DIP DIP-SLDR	28480	1200-0473
A1Q1	1854-0071	7	1	TRANSISTOR NPN SI PD=300MW FT=200MHZ	28480	1854-0071
A1R1	1810-0136	3	2	NETWORK-RES 10-SIP MULTI-VALUE	28480	1810-0136
A1R2	1810-0136	3		NETWORK-RES 10-SIP MULTI-VALUE	28480	1810-0136
A1R3	1810-0041	9	1	NETWORK-RES 9-SIP2.7K OHM X 8	28480	1810-0041
A1R4	0683-2035	3	3	RESISTOR 20K 5% .25W FC TC=-400/+800	01121	CB2035
A1R5	0683-2035	3		RESISTOR 20K 5% .25W FC TC=-400/+800	01121	CB2035
A1R6	0683-5125	8	10	RESISTOR 5.1K 5% .25W FC TC=-400/+700	01121	CB5125
A1R7	0757-0898	9	2	RESISTOR 82 2% .125W F TC=0+-100	24546	C4-1/8-T0-82R0-G
A1R8	0683-1215	9	1	RESISTOR 120 5% .25W FC TC=-400/+600	01121	CB1215
A1R9	0683-2035	3		RESISTOR 20K 5% .25W FC TC=-400/+800	01121	CB2035
A1R10	0683-5125	8		RESISTOR 5.1K 5% .25W FC TC=-400/+700	01121	CB5125
A1R11	0683-5125	8		RESISTOR 5.1K 5% .25W FC TC=-400/+700	01121	CB5125
A1R12	0683-1025	9	1	RESISTOR 1K 5% .25W FC TC=-400/+600	01121	CB1025
A1R13	0683-5125	8		RESISTOR 5.1K 5% .25W FC TC=-400/+700	01121	CB5125
A1R14	0683-5125	8		RESISTOR 5.1K 5% .25W FC TC=-400/+700	01121	CB5125
A1R15	0683-5125	8		RESISTOR 5.1K 5% .25W FC TC=-400/+700	01121	CB5125
A1R16	0683-5125	8		RESISTOR 5.1K 5% .25W FC TC=-400/+700	01121	CB5125
A1R17	0683-5125	8		RESISTOR 5.1K 5% .25W FC TC=-400/+700	01121	CB5125
A1R18	0683-5125	8		RESISTOR 5.1K 5% .25W FC TC=-400/+700	01121	CB5125
A1R19	0683-5125	8		RESISTOR 5.1K 5% .25W FC TC=-400/+700	01121	CB5125
A1R20	0683-4715	0	1	RESISTOR 470 5% .25W FC TC=-400/+600	01121	CB4715
A1R21	0683-1525	4	1	RESISTOR 1.5K 5% .25W FC TC=-400/+700	01121	CB1525
A1R22	0683-2725	8	1	RESISTOR 2.7K 5% .25W FC TC=-400/+700	01121	CB2725
A1R23	0757-0898	9		RESISTOR 82 2% .125W F TC=0+-100	24546	C4-1/8-T0-82R0-G
A1S1	3101-0571	9	1	SWITCH-PB -STA DPDT	28480	3101-0571
A1S2	3101-1973	7	1	SWITCH-SL 7-1A DIP-SLIDE-ASSY .1A 50VDC	28480	3101-1973
A1S3	3101-0537	7	1	SWITCH-SL DPDT STD 1.5A 250VAC PC	28480	3101-0537
A1U1	1820-1056	9	1	IC SCHMITT-TRIG TTL NAND QUAD 2-INP	01295	SN74132N
A1U2	1820-1415	4	1	IC SCHMITT-TRIG TTL LS NAND DUAL 4-INP	01295	SN74LS13N
A1U3	1820-1112	8	6	IC FF TTL LS D-TYPE POS-EDGE-TRIG	01295	SN74LS74N
A1U4	1820-0904	4	1	IC COMPTR TTL L MAGTD 5-BIT	07263	93L24PC2
A1U5	1820-1112	8		IC FF TTL LS D-TYPE POS-EDGE-TRIG	01295	SN74LS74AN
A1U6	1820-0586	8	5	IC DGTL, TTL LP HEX	27014	DM74L04N
A1U7	1820-1418	7	1	IC DCDR TTL LS BCD-TO-DEC 4-TO-10-LINE	01295	SN74LS42N
A1U8	1820-1202	7	1	IC GATE TTL LS NAND TPL 3-INP	01295	SN74LS10N
A1U9	1820-0070	5	1	IC GATE TTL NAND 8-INP	01295	SN7430N
A1U10	1820-1416	5	3	IC SCHMITT-TRIG TTL LS INV HEX 1-INP	01295	SN74LS14N
A1U11	1820-1197	9	7	IC GATE TTL LS NAND QUAD 2-INP	01295	SN74LS00N
A1U12	1820-1197	9		IC GATE TTL LS NAND QUAD 2-INP	01295	SN74LS00N
A1U13	1820-0515	3	1	IC MV TTL MONOSTBL RETRIG/RESET DUAL	04713	MC8602P
A1U14	1820-1204	9	1	IC GATE TTL LS NAND DUAL 4-INP	01295	SN74LS20N
A1U15	1820-1416	5		IC SCHMITT-TRIG TTL LS INV HEX 1-INP	01295	SN74LS14N

Table 7-2. Replaceable Parts, HP 59306A Relay Actuator (Continued)

Reference Designation	HP Part Number	C D	Qty	Description	Mfr Code	Mfr Part Number
A1U16	1820-1416	5		IC SCHMITT-TRIG TTL LS INV HEX 1-INP	01295	SN74LS14N
A1U17	1820-1112	8		IC FF TTL LS D-TYPE POS-EDGE-TRIG	01295	SN74LS74N
A1U18	1820-1202	9		IC DGTL, TTL TRIPLE 3	01295	SN74LS10N
A1U19	1820-1197	9		IC GATE TTL LS NAND QUAD 2-INP	01295	SN74LS00N
A1U20	1820-1112	8		IC FF TTL LS D-TYPE POS-EDGE-TRIG	01295	SN74LS74N
A1U21	1820-0621	2	3	IC BFR TTL NAND QUAD 2-INP	01295	SN7438N
A1U22	1820-0621	2		IC BFR TTL NAND QUAD 2-INP	01295	SN7438N
A1U23	1820-0471	0	1	IC INV TTL HEX 1-INP	01295	SN7406N
A1U24	1820-1112	8		IC FF TTL LS D-TYPE POS-EDGE-TRIG	01295	SN74LS74N
A1U25	1820-1197	9		IC GATE TTL LS NAND QUAD 2-INP	01295	SN74LS00N
A1U26	1820-1197	9		IC GATE TTL LS NAND QUAD 2-INP	01295	SN74LS00N
A1U27	1820-0621	2		IC BFR TTL NAND QUAD 2-INP	01295	SN7438N
A1U28	1820-1197	9		IC GATE TTL LS NAND QUAD 2-INP	01295	SN74LS00N
A1U29	1820-1416	5	1	IC DGTL, TTL LP HEX	01295	SN74LS14N
A1U30	1820-1112	8		IC FF TTL LS D-TYPE POS-EDGE-TRIG	01295	SN74LS74N
A1U31	1826-0122	0	1	IC 7805 V RGLTR TO-220	07263	7805UC
	0160-3879	7	4	CAPACITOR-FXD .01UF +-20% 100VDC CER	28480	0160-3879
	0360-0065	1	4	TERMINAL-STUD FKD-TUR SWGFRM-MTG	28480	0360-0065
	0360-0124	3	2	CONNECTOR-SGL CONT PIN .04-IN-BSC-SZ RND	28480	0360-0124
	0380-0161	0	5	STANDOFF-RVT-ON .625-IN-LG 6-32THD	00000	ORDER BY DESCRIPTION
	0380-0342	9	3	STANDOFF-RVT-ON .125-IN-LG 6-32THD	00000	ORDER BY DESCRIPTION
	1251-3283	1	1	CONNECTOR 24-PIN F MICRORIBBON	28480	1251-3283
	1530-1098	4	2	CLEVIS 0.070-IN W SLT: 0.454-IN PIN CTR	00000	ORDER BY DESCRIPTION
	59307-00006	1	1	BRACKET-ANNUNCIATOR	28480	59307-00006

Table 7-2. Replaceable Parts, HP 59306A Relay Actuator (Continued)

Reference Designation	HP Part Number	C D	Qty	Description	Mfr Code	Mfr Part Number
A3	59306-60005	9	1	BD AY-SWITCH	28480	59306-60005
A3C1	0160-4554	7	1	CAPACITOR-FXD .01UF +-20% 50VDC CER	28480	0160-4554
A3DS1	1990-0486	4	1	LED-LAMP LUM-INT=2MCD IF=25MA-MAX BVR=5V	28480	1990-0486
A3J1	1200-0473	8	1	SOCKET-IC 16-CONT DIP DIP-SLDR	28480	1200-0473
A3MP1	0371-3585	9	6	KEYCAP COVER-CLEAR	28480	0371-3585
A3MP2	2200-0521	8	4	SCREW-MACH 440	00000	ORDER BY DESCRIPTION
A3R1	0757-0401	0	7	RESISTOR 100 1% .125W F TC=0+-100	24546	C4-1/8-T0-101-F
A3R2	0757-0401	0		RESISTOR 100 1% .125W F TC=0+-100	24546	C4-1/8-T0-101-F
A3R3	0757-0401	0		RESISTOR 100 1% .125W F TC=0+-100	24546	C4-1/8-T0-101-F
A3R4	0757-0401	0		RESISTOR 100 1% .125W F TC=0+-100	24546	C4-1/8-T0-101-F
A3R5	0757-0401	0		RESISTOR 100 1% .125W F TC=0+-100	24546	C4-1/8-T0-101-F
A3R6	0757-0401	0		RESISTOR 100 1% .125W F TC=0+-100	24546	C4-1/8-T0-101-F
A3R7	0757-0401	0		RESISTOR 100 1% .125W F TC=0+-100	24546	C4-1/8-T0-101-F
A3R8	0698-3444	1	1	RESISTOR 316 1% .125W F TC=0+-100	24546	C4-1/8-T0-316R-F
A3S1	3101-2824	9	1	SWITCH-PB 6-STATION 15MM C-C SPACING	28480	3101-2824
A3S2	3101-2823	8	1	IC LCH TTL AS TRANSPARENT NEG-EDGE-TRIG	28480	3101-2823
A3W1	8120-0617	9	1	CABLE AY, 16-PIN	28480	8120-0617
A3XDS1	59306-40001	3	1	STANDOFF-LED	28480	59306-40001

See introduction to this section for ordering information
*Indicates factory selected value

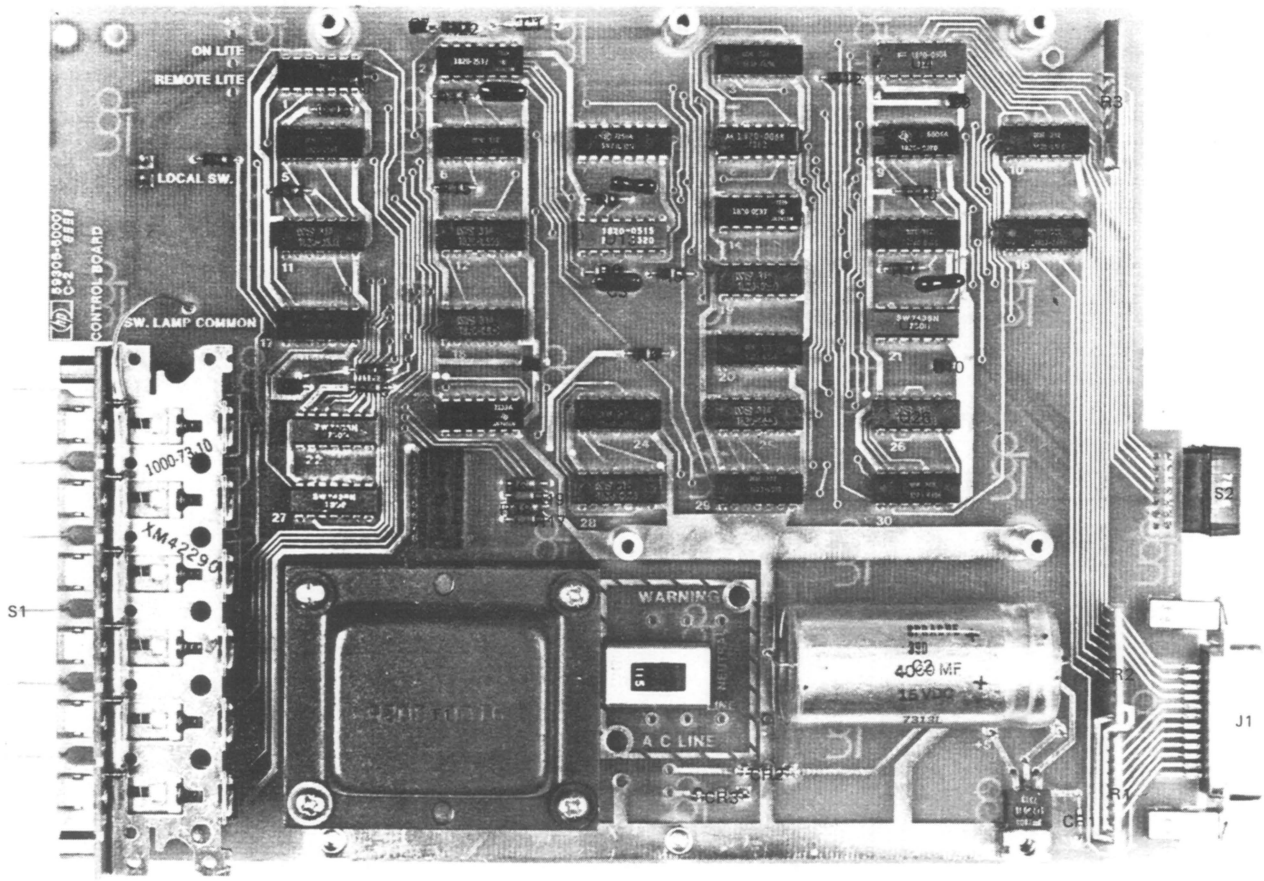

Figure 7-1. A1 Control Board (59306-60001) Component Locator and Schematic Diagram

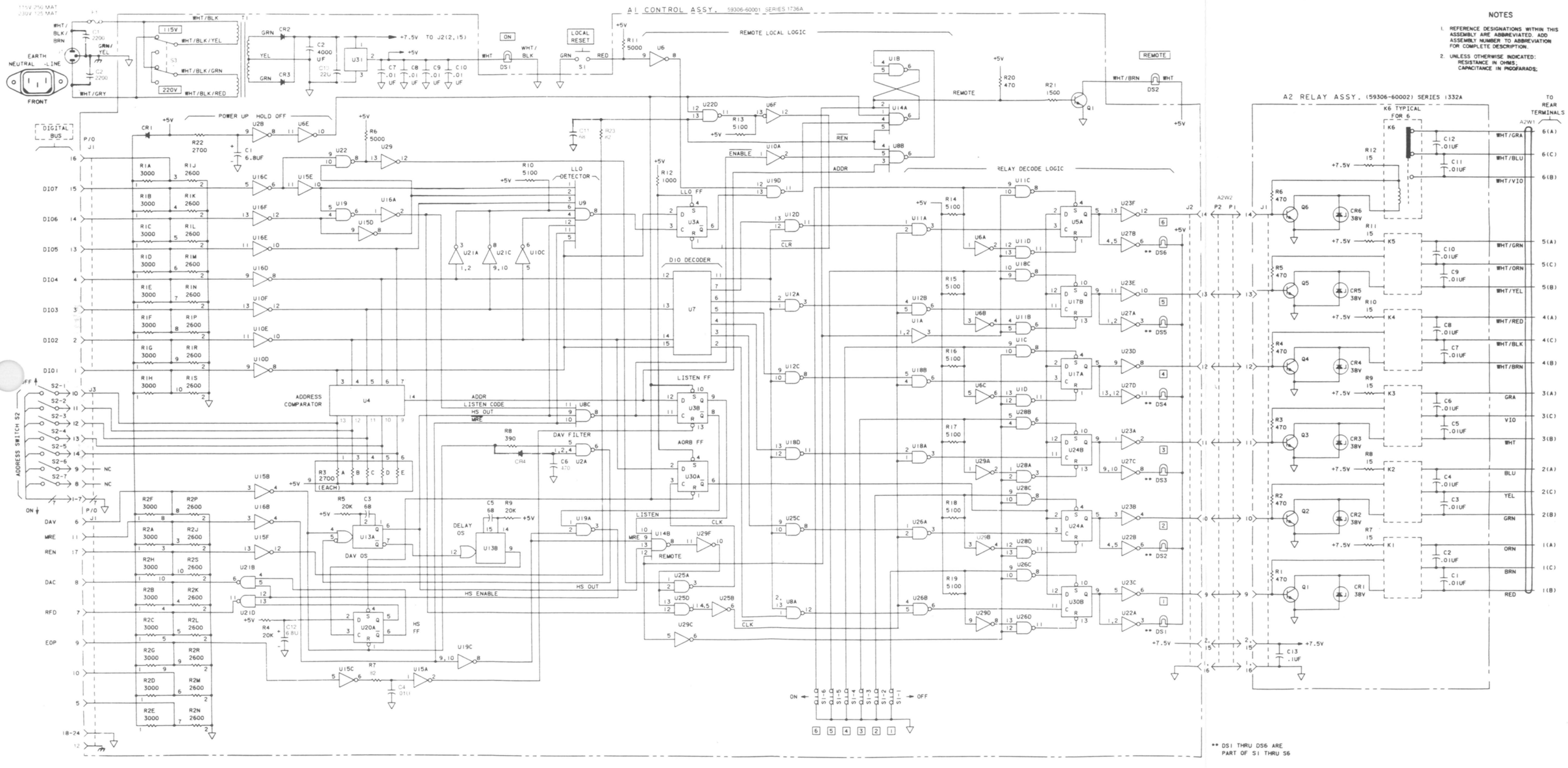

NOTES

1. REFERENCE DESIGNATIONS WITHIN THIS ASSEMBLY ARE ABBREVIATED. ADD ASSEMBLY NUMBER TO ABBREVIATION FOR COMPLETE DESCRIPTION.
2. UNLESS OTHERWISE INDICATED: RESISTANCE IN OHMS; CAPACITANCE IN PICOFARADS;

Figure 7-1
A1 CONTROL BOARD (59306-60001) COMPONENT LOCATOR AND SCHEMATIC DIAGRAM

Table 6-1. Replaceable Parts, HP 59306A Relay Actuator (Continued)

Reference Designation	HP Part Number	C D	Qty	Description	Mfr Code	Mfr Part Number
				CABINET PARTS (Series 2510)		
MP1	59306-00007	5	1	PANEL, FRONT	28480	59306-00007
MP1A	59306-00008	6	1	PANEL, SUB-FRONT	28480	59306-00008
MP2	5040-7203	0	1	TRIM-TOP	28480	5040-7203
MP3	5021-5813		1	FRAME, FRONT (METRIC)	28480	5021-5813
MP4	5040-7201	8	4	FOOT	28480	5040-7201
MP5	5040-7209	6	1	COVER-BOTTOM	28480	5040-7209
MP6	5040-7212	1	2	COVER-SIDE	28480	5040-7212
MP7	59306-00003	1	1	PANEL-REAR	28480	59306-00003
MP8	5040-7208	5	1	COVER-TOP	28480	5040-7208
MP9	59306-00009	7	1	BRACKET-MAIN BOARD	28480	59306-00009
MP10	5001-0538	8	2	TRIM-SIDE	28480	5001-0538

Table 6-3. Manufacturers Code List

MFR NO	MANUFACTURER NAME	ADDRESS	ZIP CODE
00779	AMP IN (AIRCRAFT MARINE PROD)	HARRISBURG, PA	17101
00853	SANGAMO CAPACITOR DIVISION	PICKENS, SC	29671
00866	GOE ENGINEERING CO., INC	CITY OF INDUSTRY, CA	91746
01121	ALLEN BRADLEY CO.	MILWAUKEE, WI	53204
01295	TEXAS INSTR. INC.,SEMICONDUCTOR COMP	DALLAS, TX	75231
03508	GE CO. SEMICONDUCTOR PROD DEPT	SYRACUSE, NY	13201
04713	MOTOROLA SEMICONDUCTOR PROD IN.	PHOENIX, AZ	85008
05696	MICROWAVE ASSOCIATES, INC	BURLINGTON, MA	01803
07263	FAIRCHILD CAMERA & INST.CORP SEMICON DIV	MOUNTAINVIEW, CA	94040
09353	C&K COMPONENTS, INC	NEWTON, MA	02158
11237	CTS ELECTRONICS	PASO ROBLES, CA	93446
12300	POTTER & BRUMFIELD DIV AMF CANADA LTD	GUELPH ONTARIO, CANADA	------
23880	STANFORD APPLIED ENGINEERING	SANTA CLARA, CA	95050
24546	CORNING GLASS WORKS	BRADFORD, PA	16701
27014	NATIONAL SEMICONDUCTOR CORP	SANTA CLARA, CA	95051
28480	HEWLETT-PACKARD CO, CORPORATE HQ	YOUR NEAREST HP OFFICE	
56289	SPRAGUE ELECTRIC CO	N. ADAMS, MA	01247
70903	BELDEN CORPORATION	CHICAGO, IL	60644
71279	CAMBRIDGE THERMIONICS CORP.	CAMBRIDGE, MA	02138
71400	LITTLEFUSE CORPORATION	DES PLAINS, IL	60016
71744	CHICAGO MINIATURE LAMP WORKS	CHICAGO, IL	60640
72136	ELECTRO MOTIVE MANUFACTURING CO., INC	WILLIMANTIC, CO	06226
82389	SWITCHCRAFT INCORPORATION	CHICAGO, IL	60630
95987	WECKESSER CON., INCORPORATED	CHICAGO, IL	60641

See introduction to this section for ordering information
*Indicates factory selected value

SECTION VIII
SERVICE

8-1. INTRODUCTION

8-2. This section includes schematic diagram notes (*Figure 8-1*), digital bus connector pin designations, component locators, and a schematic diagrams for the HP 59306A Relay Actuator.

SYMBOLS

DANGEROUS VOLTAGE, EXCEEDS 1000 VOLTS	KNOB CONTROL
FRONT PANEL LABEL	SCREWDRIVER ADJUST
REAR PANEL LABEL	MAIN SIGNAL PATH
INTERIOR AND PC BOARDS LABEL	FEEDBACK PATH
WIPER MOVES TOWARD "CW" WHEN CONTROL IS ROTATED CLOCKWISE	TEST POINT
PROTECTIVE CONDUCTOR TERMINAL	INSTRUCTION MANUAL REFERENCE
CIRCUIT COMMON	ALTERNATING CURRENT
IDENTIFIED COMMON	DIRECT CURRENT
CHASSIS TERMINAL	ALTERNATING OR DIRECT CURRENT

PRINTED CIRCUIT BOARD IDENTIFICATION

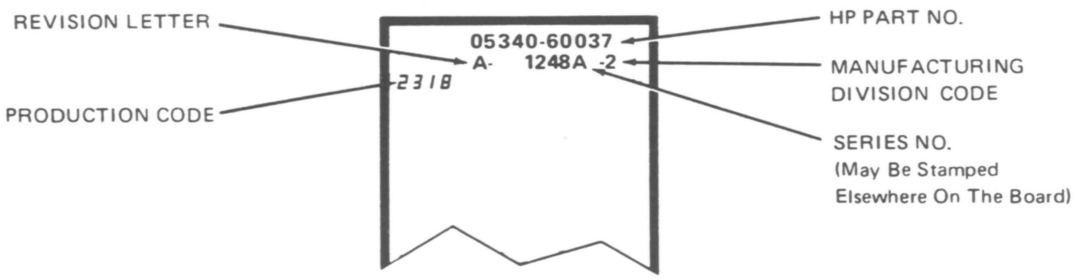

REFERENCE DESIGNATIONS

REFERENCE DESIGNATIONS WITHIN ASSEMBLIES ARE ABBREVIATED. ADD ASSEMBLY NUMBER TO ABBREVIATION FOR COMPLETE DESCRIPTION. JACKS ARE THE STATIONARY CONNECTORS AND PLUGS ARE THE MORE MOVEABLE OF TWO CONNECTORS.

ASSEMBLY	ABBREVIATION	COMPLETE DESCRIPTION
A25	C1	A25C1
A25A1	CR1	A25A1CR1
NO PREFIX	J3	J3

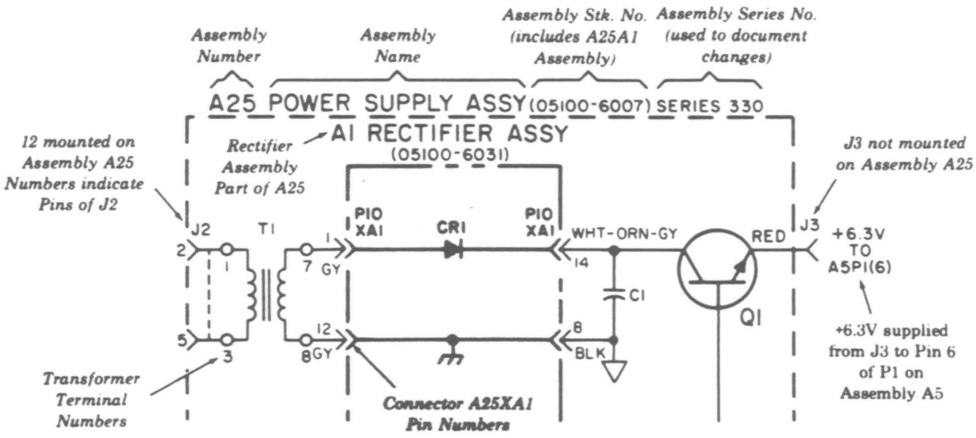

Figure 8-1. Schematic Diagrams Notes

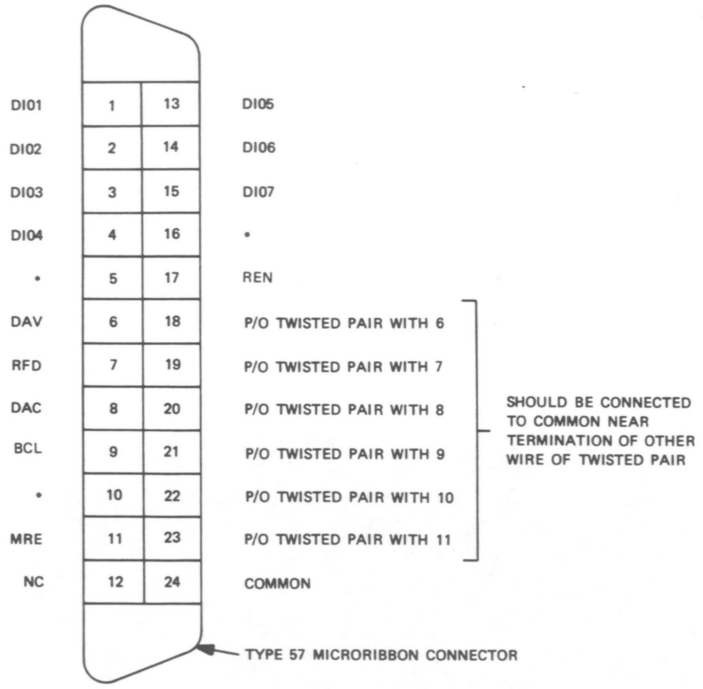

*THESE PINS ARE TERMINATED WITH RESISTIVE NETWORKS (SEE SCHEMATIC) AND NORMALLY FLOAT AT APPROXIMATELY 3V.

NOTE 1: PINS 18 THROUGH 23 SHOULD BE CONNECTED TO COMMON NEAR THE TERMINATION OF THE OTHER WIRE OF ITS TWISTED PAIR. PIN 12 IS CONNECTED TO COMMON ONLY AT THE CONTROLLER.

DIGITAL BUS PIN SUMMARY

DIGITAL BUS CONNECTOR PIN NUMBER	LINE NAME	USE
1-4, 13-15	DIO1-7	Carries characters to HP 59306A for relay control or for processing as Bus commands.
16	DIO8	Not monitored or driven, terminated by resistive network.
6 7 8	DAV RFD DAC	These three lines make-up the "handshake" system on the HP Interface Bus. DAV is monitored and RFD and DAC are driven by HP 59306A to control rate of data transferred on DIO lines.
9	EOP	Unconditionally clears Listen F/F, halting remote operation. Does not return control to front panel pushbuttons.
11	MRE	Indicates to HP 59306A whether character on DIO lines is Bus command or for relay control.
5	EOI	Not monitored or driven, terminated by resistive network.
10	SRQ	Not monitored or driven, terminated by resistive network.
12	Shield	Not connected.
17	REN	When low the HP 59306A is in remote operation. When high the HP 59306A is in local control.
18-24	Grounds	Connected to chassis ground.

Figure 8-2. Digital Bus Connector Pin Designations

A1

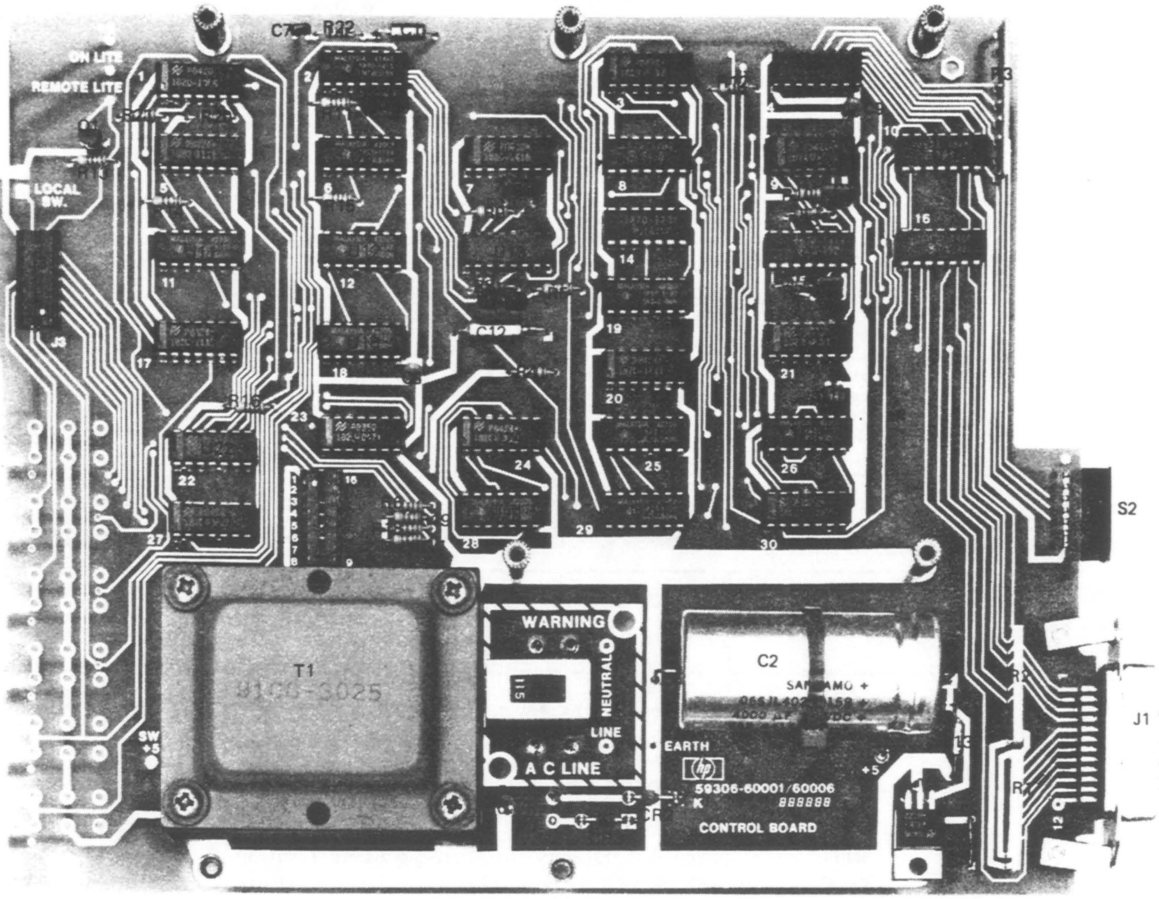

Part of Figure 8-3. HP 59306A Schematic Diagram (Component Locator)

A2

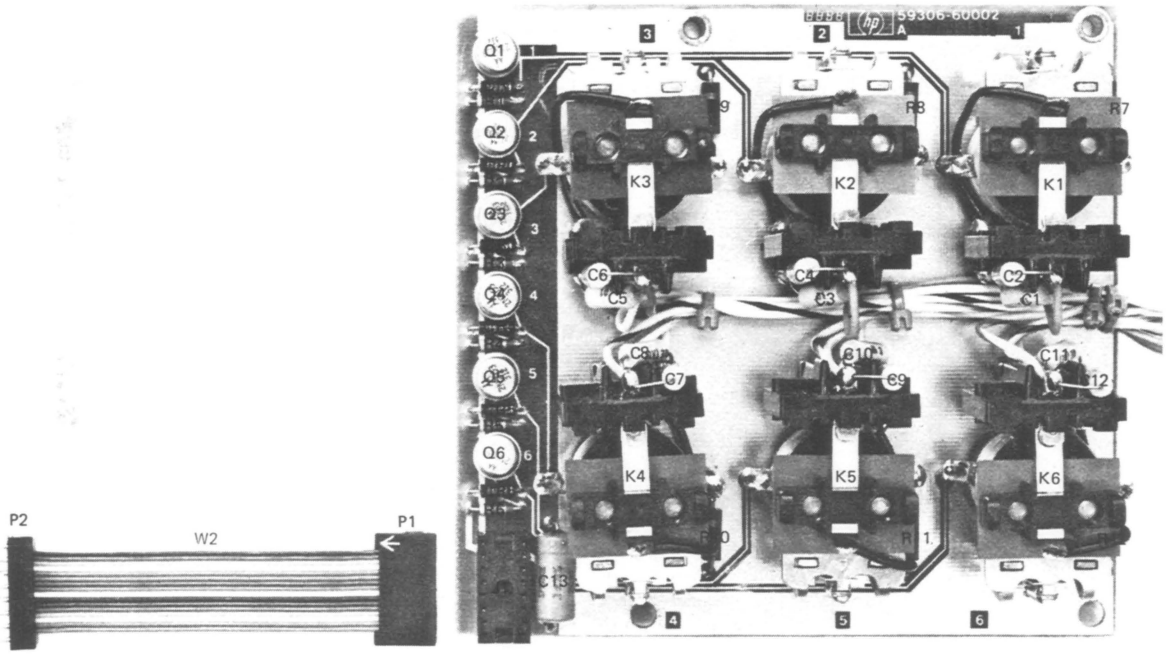

Part of Figure 8-3. HP 59306A Schematic Diagram (A2 Relay Board)

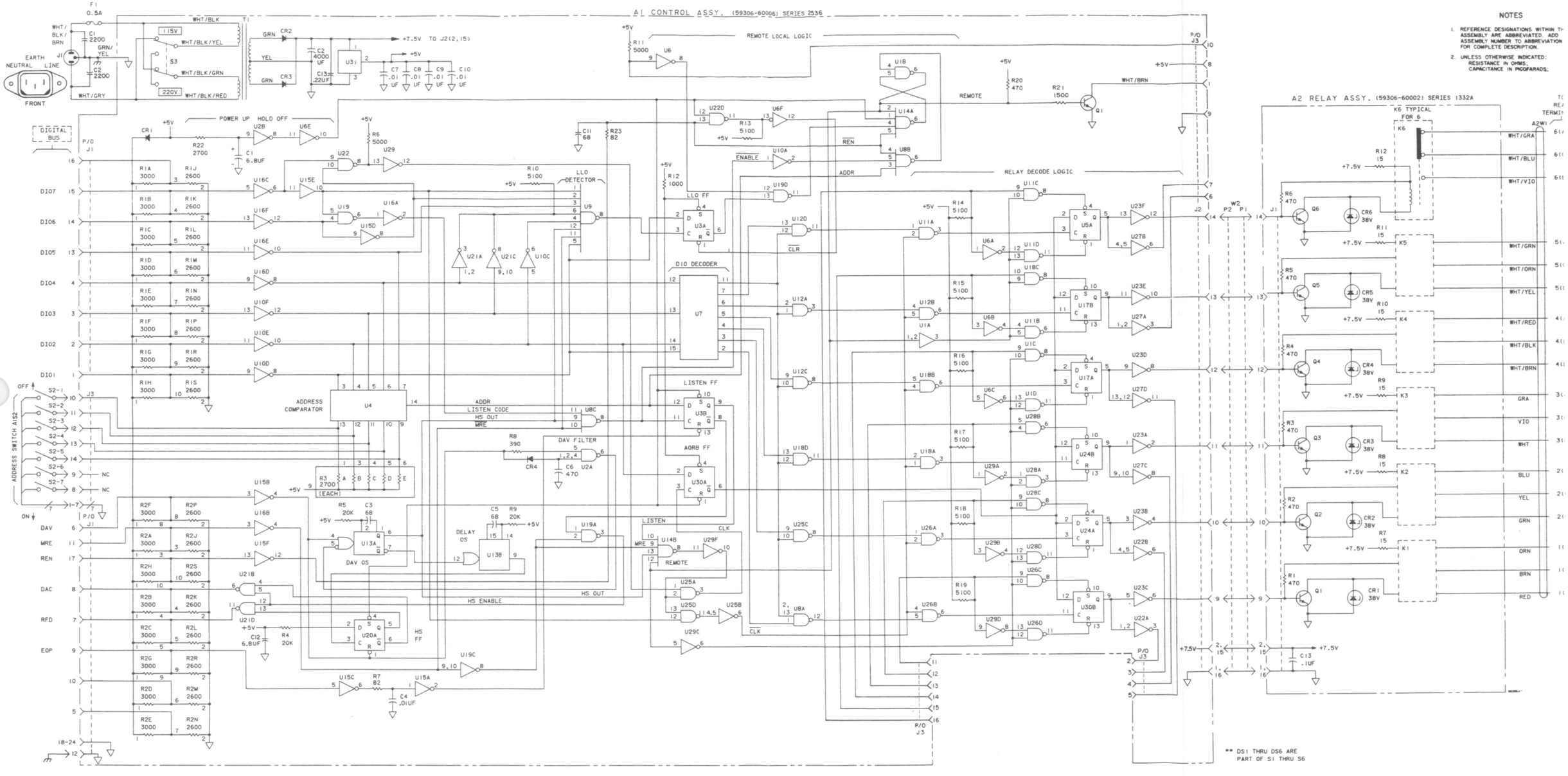

Figure 8-3
A1 CONTROL ASSEMBLY (59306-60006, SERIES 2536)
A2 RELAY ASSEMBLY (59306-60002, SERIES 1332)
COMPONENT LOCATOR AND SCHEMATIC DIAGRAM

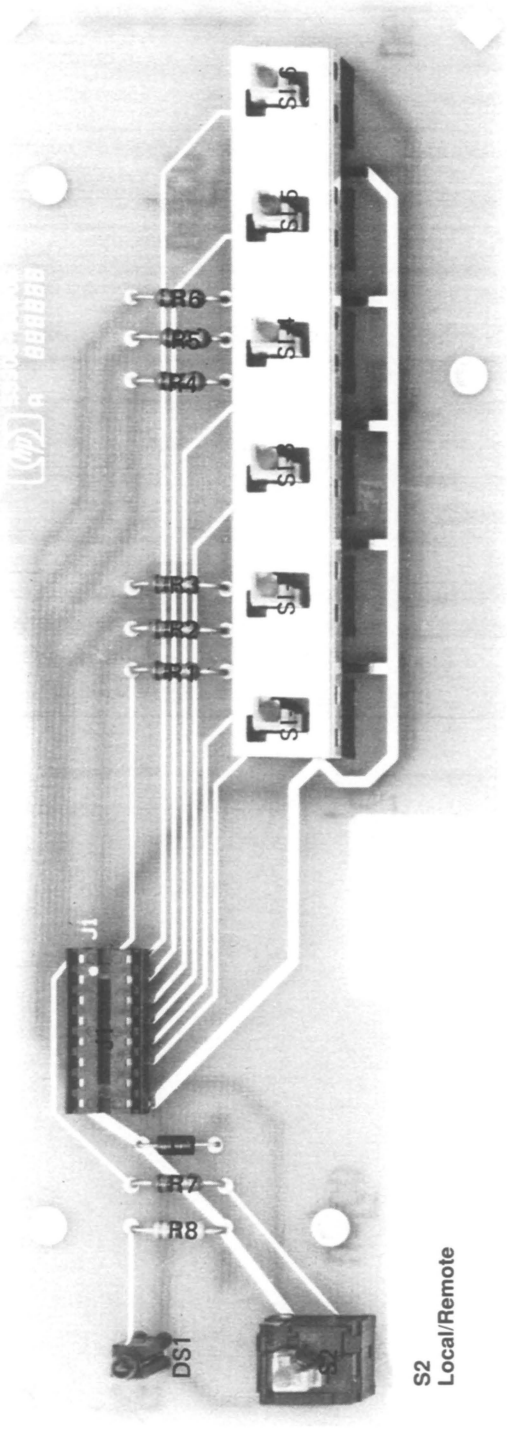

Part of Figure 8-4. A3 Switch Assembly (59306-60005) Component Locator

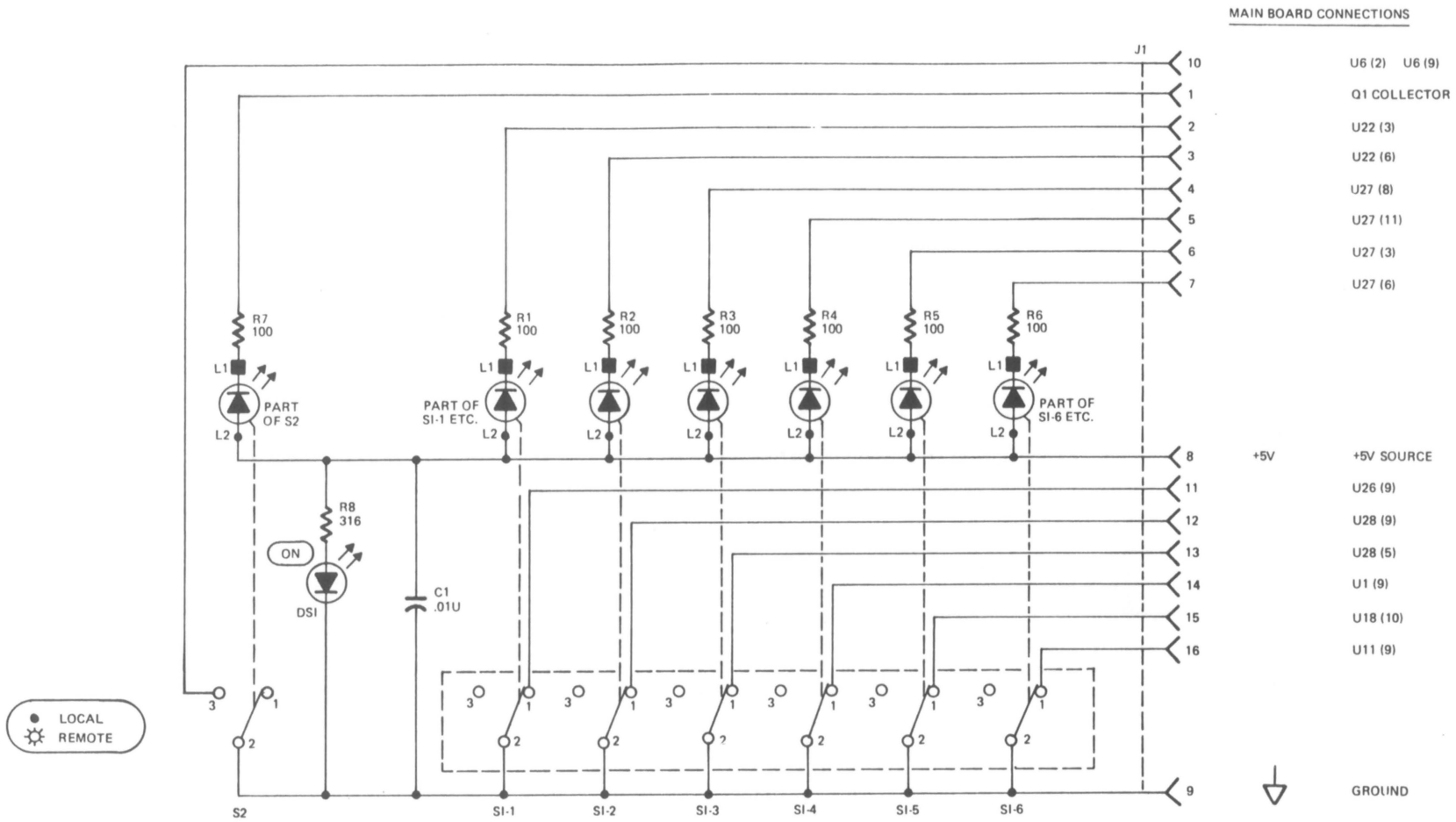

MATERIAL LIST

C1	CF .1U 20%	0160-4554
J1	16-DIP SOCKET	1200-0473
DS1	LED-RED	1990-0486
R1-7	100 .125W F	0757-0401
R8	316 .125W F	0698-3444
S1	CENTRAL LAB 6-STA MPS STYLE SWITCH A4 W/INTEGRAL LEDS.	3101-2824
S2	CENTRAL LAB MPS SWITCH W/LEDS.	3101-2823
XDSI	STANDOFF-LEDS.	59306-40001
	BOARD-BLANK	59306-20005

Part of Figure 8-4. A3 Switch Assembly (59306-60005) Schematic Diagram

HEWLETT PACKARD

For more information, call your local HP sales office listed in your telephone directory or an HP regional office listed below for the location of your nearest sales office.

United States:
Hewlett-Packard Company
4 Choke Cherry Road
Rockville, MD 20850
(301) 670 4300

Hewlett-Packard Company
5201 Tollview Drive
Rolling Meadows, IL 60008
(708) 255 9800

Hewlett-Packard Company
5651 W. Manchester
Los Angeles, CA 90045
(213) 337 8035

Hewlett-Packard Company
2000 South Park Place
Atlanta, GA 30339
(404) 980 7351

Canada:
Hewlett-Packard Ltd.
6877 Goreway Drive
Mississauga, Ontario L4V 1M8
(416) 678 9430

Japan:
Yokogawa-Hewlett-Pacakrd Ltd.
15-7, Nishi Shinjuku 4 Chome
Shinjuku-ku
Tokyo 160, Japan
(03) 5371 1315

Latin America:
Hewlett-Packard
Latin American Region Headquarters
Monte Pelvoux No. 111
Lomas de Chapultepec
11000 Mexico, D.F.
(525) 202 0155

Australia/New Zealand:
Hewlett-Packard Australia Ltd.
31-41 Joseph Street
Blackburn, Victoria 3130
Australia (A.C.N. 004 394 763)
(03) 895 2895

Far East: Asia Pacific
Hewlett-Packard Asia Pacific Ltd.
22/F Bond Centre, West Tower
89 Queensway
Central, Hong Kong
(852) 848 7777

In Europe, please call your local HP sales office or representative:

Austria:
(0222) 2500-0

East Central Europe, USSR, and Yugoslavia:
Vienna - Austria
(0222) 2500-0

Belgium and Luxembourg:
(02) 761 31 11

Denmark:
(45) 99 10 00

Finland:
(90) 88 721

France:
(1) 69 82 60 60

Germany:
(06172) 16 0

Greece:
(01) 68 28 811

Iceland:
High Performance Systems hf.
(91) 67 10 00

Ireland:
(01) 88 33 99

Israel:
Computation and Measurement Systems (CMS) Ltd.
(03) 5380 333

Italy:
(02) 95 300 134

Netherlands:
(020) 547 6669

Norway:
(02) 87 97 00

Portugal:
(11) 301 73 30

Spain:
900 123 123

Sweden:
(08) 750 20 00

Switzerland:
(057) 31 21 11 (Headoffice)
(022) 780 41 11 (Suisse Romande)
(046) 05 15 05 (Customer Information Center)

South Africa:
HiPerformance Systems
(011) 802 5111

Turkey:
(1) 175 29 70

U.K.:
(0344) 369 369

Europe/Africa/Middle East:
Hewlett-Packard S.A.
Marcom Operations Europe
P.O. Box 529
1180 AM Amstelveen
The Netherlands

Printed in U.S.A.
Data subject to change.
Rev. 9/91

MANUFACTURER'S DECLARATION

NOTE

This is to certify that this product meets the radio frequency interference requirements of Directive FTZ 1046/1984. The German Bundespost has been notified that this equipment was put into circulation and has been granted the right to check the product type for compliance with these requirements.

Note: If test and measurement equipment is operated with unshielded cables and/or used for measurements on open setups, the user must insure that under these operating conditions, the radio frequency interference limits are met at the border of his premises.

NOTE

Hiermit wird bescheinigt, dass dieses Gerät/System in Übereinstimmung mit den Bestimmungen von Postverfügung 1046/84 funkentstört ist.

Der Deutschen Bundespost wurde das Inverkehrbringen dieses Gerätes/Systems angezeigt und die Berechtigung zur Überprüfung der Serie auf Einhaltung der Bestimmungen eingeräumt.

Zusatzinformation für Mess- und Testgeräte:

Werden Mess- and Testgeräte mit ungeschirmten Kabeln und/oder in offenen Messaufbauten verwendet, so ist vom Betreiber sicherzustellen, dass die Funk-Entstörbestimmungen unter Betriebsbedingungen an seiner Grundstücksgrenze eingehalten werden.

ACOUSTIC NOISE EMISSION: LpA <40 dB; no fan installed.
GERAeUSCHEMISSION: LpA <40 dB; Kein Ventilator eingebaut.

HEWLETT PACKARD

MANUAL PART NUMBER: 59306-90007

PRINTED IN U.S.A.
OCTOBER 1991